INSTRUCTION AND SERVICE MANUAL

ELECTROHOME ELECTRONICS

G07-901 R.G.B. COLOR MONITOR

Gremlin
Manual Part No.
420-0486

THIS INFORMATION IS UP TO DATE AS OF DECEMBER 1979

Gremlin/SEGA

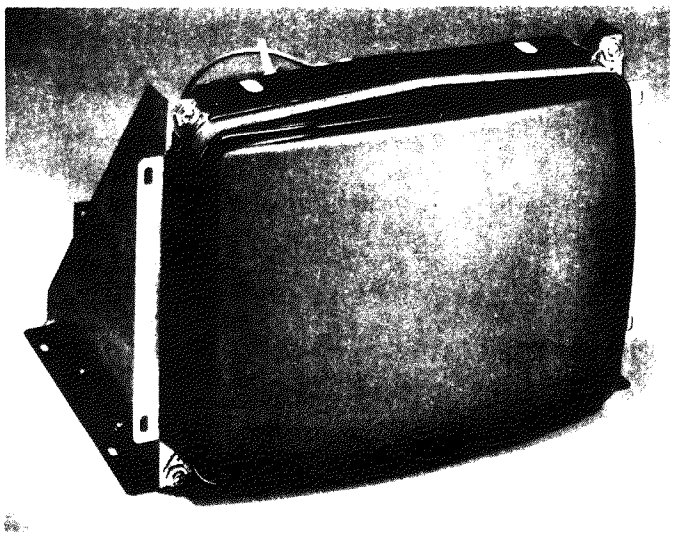

FRONT VIEW

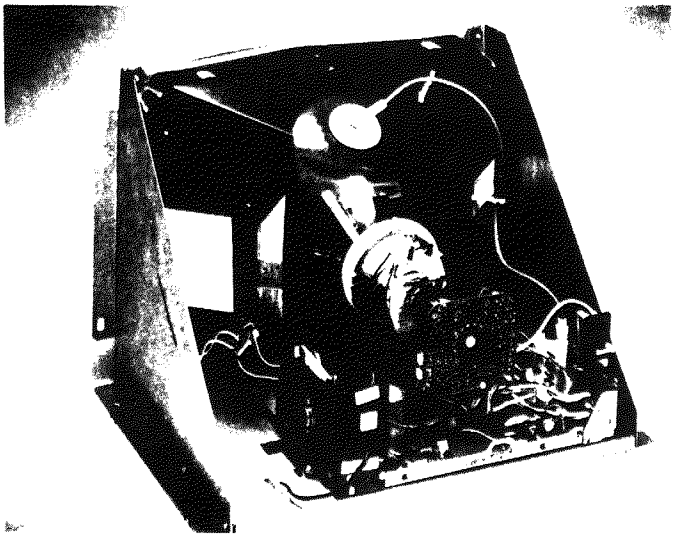

REAR VIEW

Service Data Reference

When writing for Service Information, please quote chassis type number and model code. See chassis type number and model code located on the right hand side panel.
This information is correct as of November 1979.

File Supplementary Model Data with this G07 Manual.

Warnings

1. Power Up Warning

   Caution: If the monitor is to be powered up outside of the games console, an isolation transformer must be used for the AC power source.

2. X-Radiation

   This chassis has been designed for minimal x-radiation hazard. However, to avoid possible exposure to soft x-radiation it is IMPERATIVE that the EHT circuitry IS NOT modified.

3. High Voltage

   The colour monitor contains HIGH VOLTAGES derived from power supplies capable of delivering LETHAL quantities of energy. To avoid DANGER TO LIFE, do not attempt to service the chassis until all precautions necessary for working on HIGH VOLTAGE equipment have been observed.

4. CRT Handling

   The picture tube encloses a high vacuum and due to the large surface area is subject to extreme force. Care must be taken not to bump or scratch the picture tube as this may cause the tube to implode resulting in personal injury and property damage. Shatter-proof goggles must be worn by individuals while handling the CRT or installing it in the monitor. Do not handle the CRT by the neck.

5. To prevent fire or shock hazard DO NOT EXPOSE THIS MONITOR TO RAIN OR MOISTURE.

Operating Instructions

1. Apply a suitable power source to the monitor through an isolation transformer by means of P901.
2. Apply a suitable signal source to the monitor PCB by means of J201.
3. Set up Controls
   All controls are preset at the factory, but may be adjusted to suit program material. Refer to pages 6 and 8 (WHITE BALANCE AND GRAY SCALE TRACKING)

Performance and Operating Data

1.0 Supply

Voltage	108 VAC - 132 VAC
Frequency	44 Hz - 63 Hz

Note: Apply supply voltage through an isolation transformer with 1 Amp. capability.

2.0 High Voltage (EHT)

For 19"V models	22.5KV - 25.5 KV

Note: Condition for above I (beam) = 0
B_1 = 120V

3.0 Input Signal and Pin Assignments for J201

Pin No.	Description	Impedance	Signal Range
1	Red input	5K nom.	0 to 4V
2	Green input	5K nom.	0 to 4V
3	Blue input	5K nom.	0 to 4V
4	Ground		
5	Vertical sync pulse	35K nom.	+2V to +4V
6	Horizontal sync pulse	35K nom.	+2V to +4V

4. Service Set-Up Controls

4.1 B1 adjustment, R909 - Set for B1 = 120V DC

4.2 Vertical hold control, R302

4.3 Horizontal hold control, R504

4.4 Vertical size control, R408

4.5 Vertical centering tabs, 3 positions

4.6 CRT cut off controls (See fig. 3)

- Red cut off, R114
- Green cut off, R115
- Blue cut off, R113

4.7 Screen control (G2) R124 (See fig. 3)

4.8 Video drive controls (See fig. 3)

- Red drive, R105
- Green drive, R106

4.9 Horizontal width coil, L503

4.10 Focus control, R1

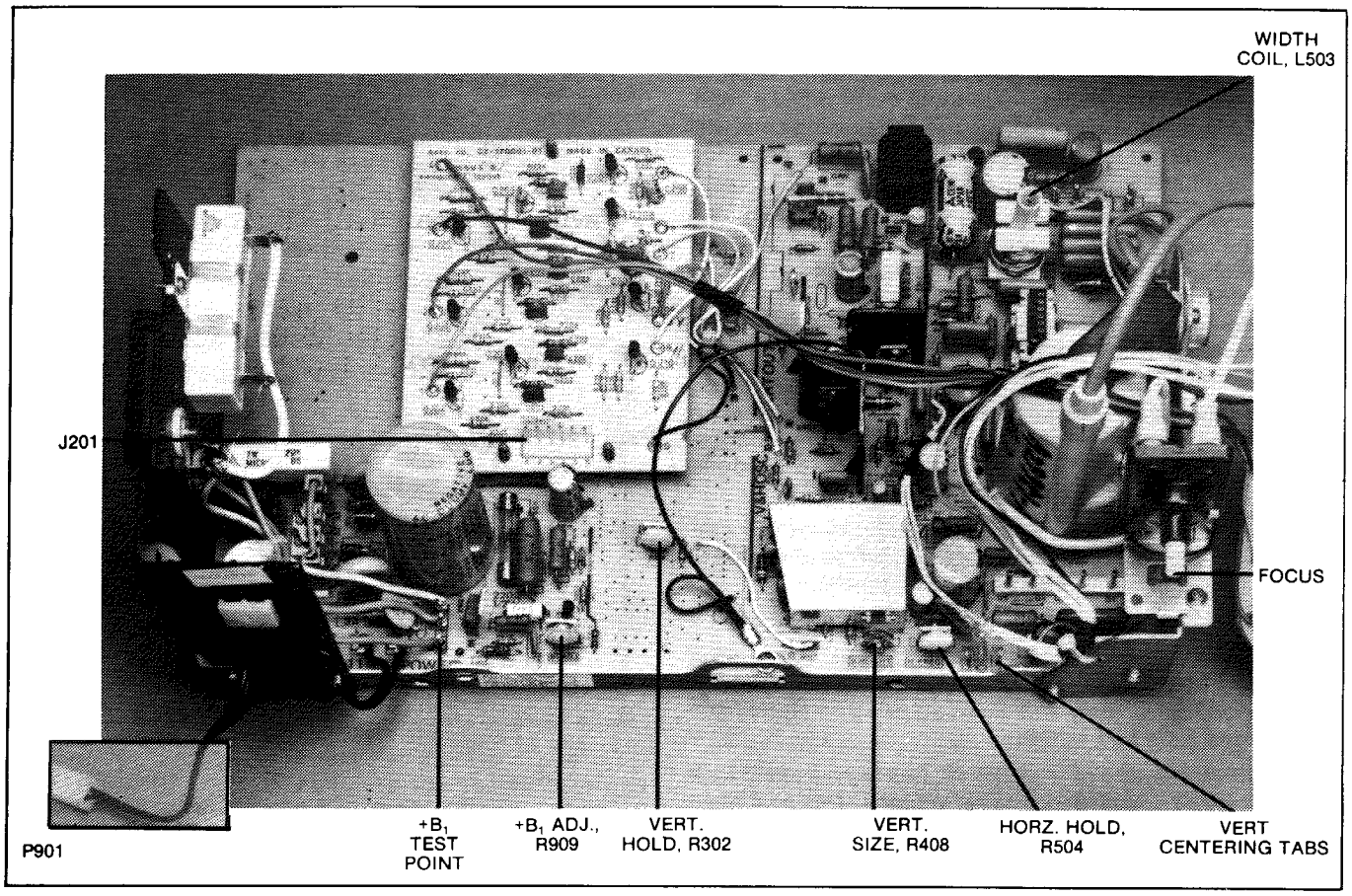

Figure 1

Product Safety and Servicing Guidelines

Safety Checks

Subject: Fire and Shock Hazard

1. No modification of any circuit should be attempted. Service work should be performed only after you are thoroughly familiar with all of the following safety checks and service guidelines. To do otherwise increases the risk of potential hazards and injury to the user.
2. When service is required, observe the original lead dress. Extra precaution should be given to assure correct lead dress in the high voltage circuitry area. Where a short circuit has occurred, replace those components that indicate evidence of overheating. Always use the manufacturer's specified replacement component. See parts list in the back of this manual.
3. Periodically check the high voltage for proper value using a meter of known accuracy and calibration.
4. Check for frayed insulation on wires.

Notes

Service Set-Up Procedure

NOTE: All monitors are equipped with automatic degaussing coils which effectively demagnetize the picture tube each time the monitor is turned on. The degaussing coils will operate any time the set is turned on after having been off for at least five minutes.

The degaussing effect is confined to the picture tube since the coils are mounted on the ferrous tube shield. Should any part of the chassis or cabinet become magnetized, it will be necessary to degauss the affected area by means of a manual degaussing coil. Move the coil slowly around the CRT face area, then slowly withdraw for a distance of six feet before disconnecting the coil from the AC power supply.

Normally little, if any adjustment should be necessary. However, when a picture tube, yoke or similar component is replaced, preliminary static convergence should be done before attempting purity adjustment, and so on.

Set up should be done in a north/south direction. Horizontal and vertical centering taps should be set to the centre position if a major component has been changed.

1.0 Purity

1.1 Loosen yoke retaining clamp (figure 2), remove adhesive material fixing wedges to CRT. Remove wedges completely and clean off dried adhesive from picture tube and wedges.

1.2 A small quantity of "nail polish" has been used to lock the purity convergence rings in place. This seal must be broken with a sharp tipped instrument before any adjustments are attempted. Some models also use a locking ring at either end of the purity and convergence rings. This must be loosened before adjustments are made. It goes without saying that upon completion of all adjustments, the lock must be reset and/or a dab of paint or nail polish must be re-applied to edge of rings to prevent movement.

1.3 Connect an appropriate signal source, eg: Electrohome RGB generator producting a white field plus individual red, green and blue fields.

1.4 Bring the long and short purity tab protrusions in line with each other to obtain near-zero magnetic field (figure 4) (In some cases bring the flat and indented tabs together to obtain zero field). Protrusions can then be vertical, horizontal or at any convenient angle to start.

1.5 Turn off the green and blue fields and adjust setup controls to produce a red field. (See fig. 3)

1.6 Pull the deflection yoke back so that a red band appears in the centre of the screen.

1.7 Spread the tabs apart as little as necessary and rotate both rings together to center the red band horizontally on the face of the CRT (approximate). (See Fig. 5)

1.8 Slide the yoke towards the bell of the picture tube slowly to obtain a uniform red field (pure in color) across the entire tube face. Juggle back and forth slightly as necessary. Lightly tighten yoke retaining clamp.

1.9 Momentarily switch on a cross-hatch signal and rotate yoke to level the pattern on the face of CRT.

1.10 Return generator to regain red raster.

1.11 Turn off red field and check for pure field for each of the green and blue fields. Reposition yoke if necessary to obtain optimum purity on all fields.

1.12 Tighten yoke retaining clamp to prevent yoke shift or rotation. (Do not install wedges at this time.)

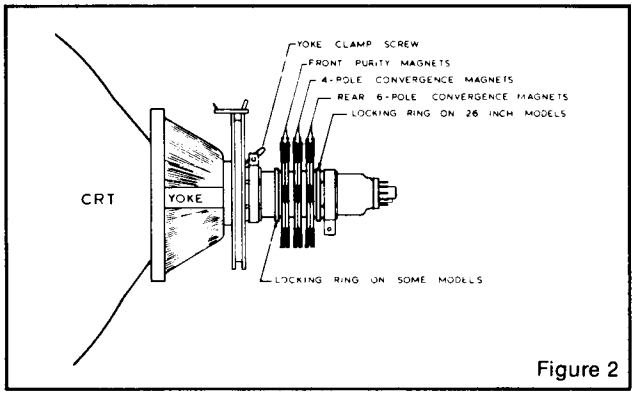

Figure 2

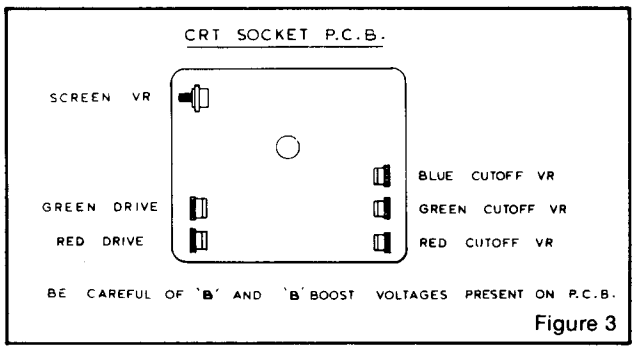

Figure 3

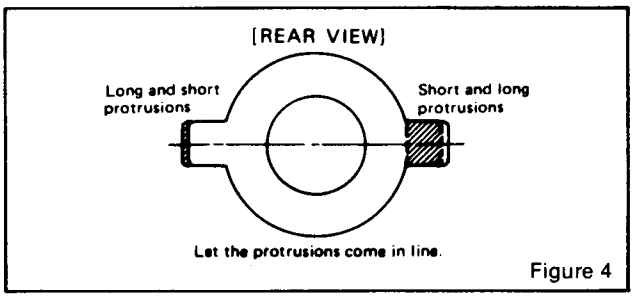

Figure 4

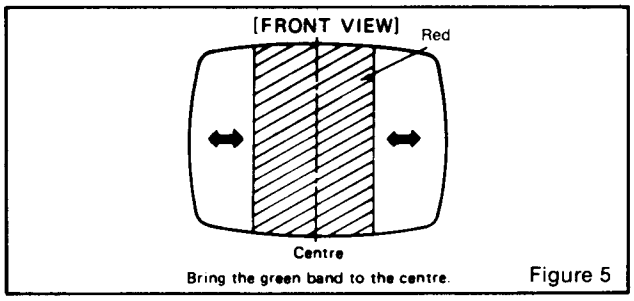

Figure 5

2.0 Static and Dynamic Convergence

NOTE: Static convergence is achieved by four magnets located on the neck, nearest the base of the picture tube, Fig. 2. The middle pair of magnetic rings are adjusted to converge the blue and red crosshatch lines. The rear pair of convergence rings (closest to the base of the picture tube) are adjusted to converge the magenta (blue/red) to the green crosshatch lines. Dynamic convergence is achieved by tilting the deflection yoke up-down and left-right.

2.1 Ensure that the controls misadjusted during purity setup (screen, cut-off, etc.) are set to give white balance. See 3.0 below.

2.2 Switch generator to the crosshatch pattern.

2.3 Adjust convergence around the edges of the picture tube by tilting the yoke up-down and left-right, and temporarily install one wedge at the top of the yoke or in a more optimum position. (Figures 8, 9, 10)

2.4 Turn off green input and turn on the red and blue input.

2.5 Rotate the 4-pole (middle) pair of magnets as a unit to minimize separation of the red and blue crosshatch lines around the center of the screen (Figure 6). Variation of the angle between the tabs adjusts convergence of red and blue. (Tilt yoke as required to converge red and blue at the edges as in 2.3 above.)

2.6 Turn on green input to obtain magenta (red/blue) and green crosshatch lines. Rotate the 6-pole (rear) pair of magnets as a unit to minimize separation of the magenta and green lines (figure 7). Vary angle between the two tabs and further rotate as a unit to finalize.

2.7 When converence of 3 colors is optimized (static in center and dynamic around edges) apply stripe of paint or nail polish to converence magnet rings to prevent movement. If applicable, tighten locking ring carefully.

2.8 Remove temporary wedge from yoke. Tilt yoke in up-down and left-right direction for best circumference convergence and install 3 wedges. (It is best to use 3 new wedges since they have adhesive backing. Simply pull off tape, slide wedge in place and press outer flap down firmly. For more permanency apply small quantity of silastic or similar material at junction of wedges and picture tube. Do not disturb while material is setting. (Order wedges by part number 39-1233-01).

3.0 White Balance (Grey Scale Tracking)

Refer to figure 3. Do the following in subdued light:

3.1 Note this adjustment can be accomplished with no signal connected; eg: input connector open or if a signal generator is connected, switch off all 3 inputs at the generator.

3.2 Set red and green drive controls to their mechanical center and turn the common G2 screen control and 3 cut-off controls to minimum (fully counterclockwise).

3.3 Slowly turn up G2 screen control until the first faint color appears, then back off to edge of visibility. Do not touch the associated cut-off control - it should stay fully CCW for the remaining set-up.

3.4 Slowly turn up the other two color cut-off controls in turn to match the first. This should result in the faintest grey.

3.5 Turn on the signal generator with all 3 inputs on. (a crosshatch pattern would be appropriate).

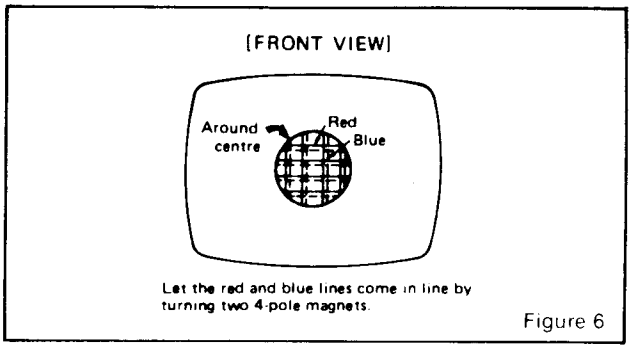

Let the red and blue lines come in line by turning two 4-pole magnets.

Figure 6

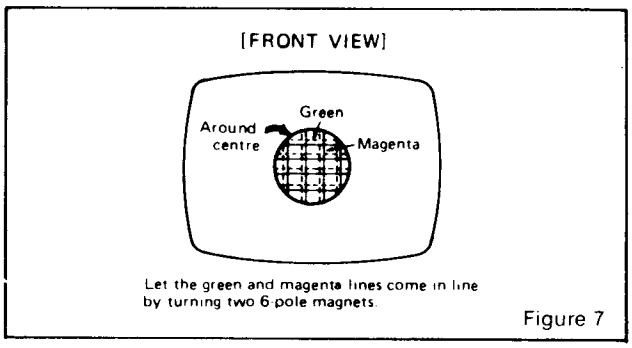

Let the green and magenta lines come in line by turning two 6-pole magnets.

Figure 7

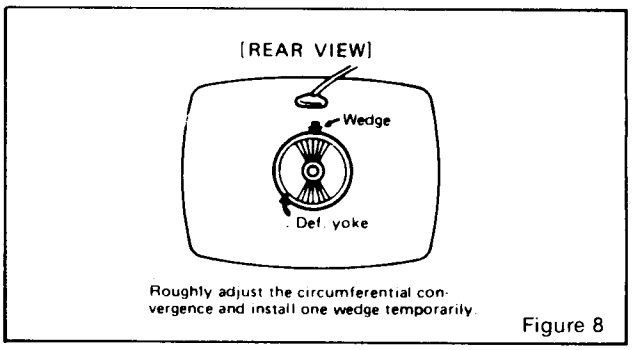

Roughly adjust the circumferential convergence and install one wedge temporarily.

Figure 8

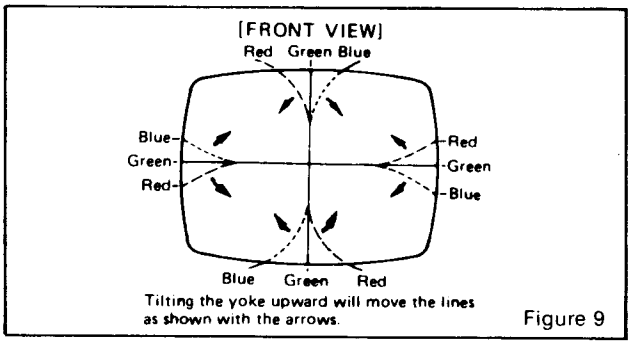

Tilting the yoke upward will move the lines as shown with the arrows.

Figure 9

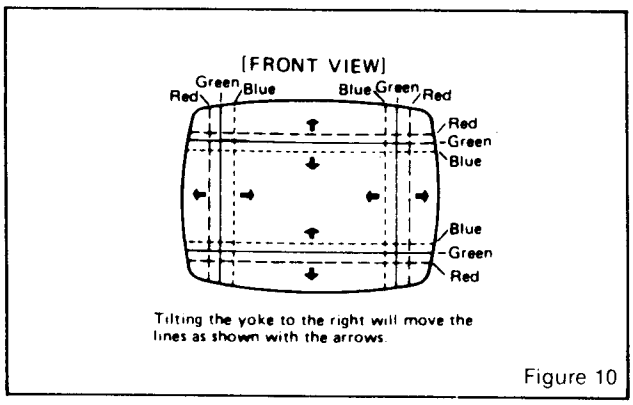

Tilting the yoke to the right will move the lines as shown with the arrows.

Figure 10

3.6 Adjust the red and green drive controls for "neutral white" on high white picture areas. Generally these controls will be left at mech. centre.

3.7 Note: When monitor is re-connected with the game the screen control (G2) may require a slight adjustment to obtain proper black level. (the black portion of picture just extinguished).

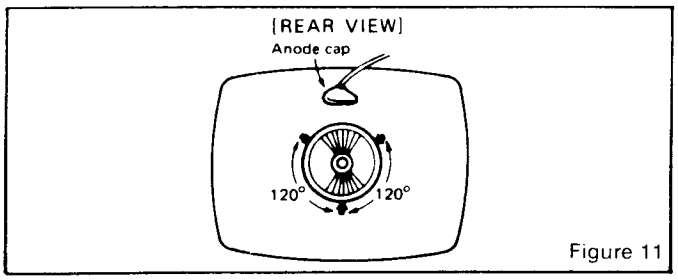

Figure 11

4.0 Power Supply

The regulated +B1 control (R909) has been factory adjusted and normally requires no adjustment. However, if any repairs have been made to the chassis it is recommended that this adjustment should be made.

a) Allow 5 minutes to warm up.
b) No signal applied.
c) Connect an accurate D.C. voltmeter to TP-91 or the emitter of X04 power regulator transistor.
d) Adjust R909 for 120V. (See fig. 1)

Note:
Should +B1 control be set too high, it may cause possible component damage. Use an accurate D.C. voltmeter to set B1 (B+).

5.0 Focus

Adjust focus control for best overall definition and picture detail an average signal applied. (Highlights should be favoured.)

6.0 Color Service Generator for G07 Monitor

Electrohome has developed a color service generator that is specifically designed for use with the G07 color data monitor. It provides the monitor with both horizontal and vertical sync, as well as the following test patterns:

1) Fine cross-hatch pattern
2) Broad bar cross-hatch pattern
3) Complete field

Three color selection switches, red, green and blue, provide the ability to display the above patterns in the three primary colors as well as the three secondary colors.

This product may be ordered from:
Contracts Marketing
ELECTROHOME Electronics
809 Wellington St. North
Kitchener, Ontario
Canada N2G 4J6
Telephone: (519) 744-7111, Ext. 567

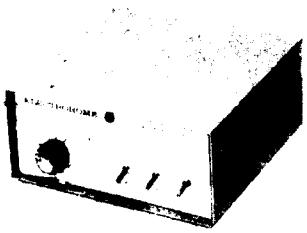

7.0 X-Ray Emission Check

7.1 Assure the power supply B1 is properly adjusted to 120V DC. See Item 4.0 (page 8)

7.2 Assure that the anode voltage does not exceed max. as per Item 2.0 page 4.

7.3 Assure that the high voltage hold down circuit is operating correctly. Use the following procedure.

a) Increase the B1 greater than 138.5V by shorting collector/emitter of the power regulator, X04.

b) Observe that the anode voltage (EHT) goes to 0. If the EHT does not go to 0, a fault must be located and repaired.

c) Remove short and set should return to normal operation. (Note, after the short is removed some monitors may not restart. In this case, remove power from monitor momentarily and normal operation will be restored.

Note:
The protector circuit consists of the components shown below in Fig. 13 with a circuit description.

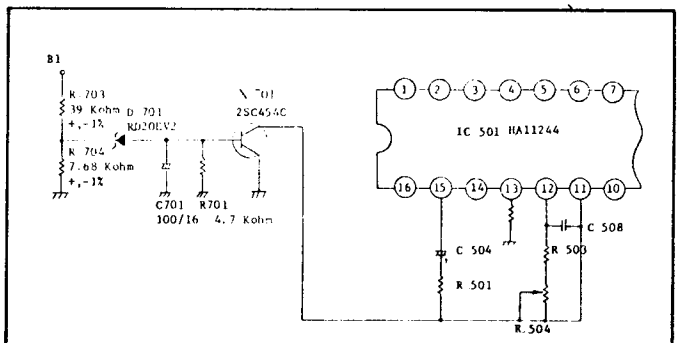

Figure 13

8.0 Circuit Diagram and Description of High Voltage Hold Down or Safety Circuit

8.1 Circuit Diagram of High Voltage Hold Down Circuit.

8.2 Operation of High Voltage Hold Down Circuit.

The high voltage hold-down circuit protects the high voltage circuit from dangerous voltage with short circuiting between emitter and collector of power regulating transistor.

The base voltage of X701 is increased when the B1 voltage is increased more than 138.5 V DC.

When the base of X701 is increased, a short is produced by X701 between pin 11 and ground of IC 501, shutting down the horizontal osc. and high voltage.

INTERFACE P.C.B. COMPONENT LAYOUT

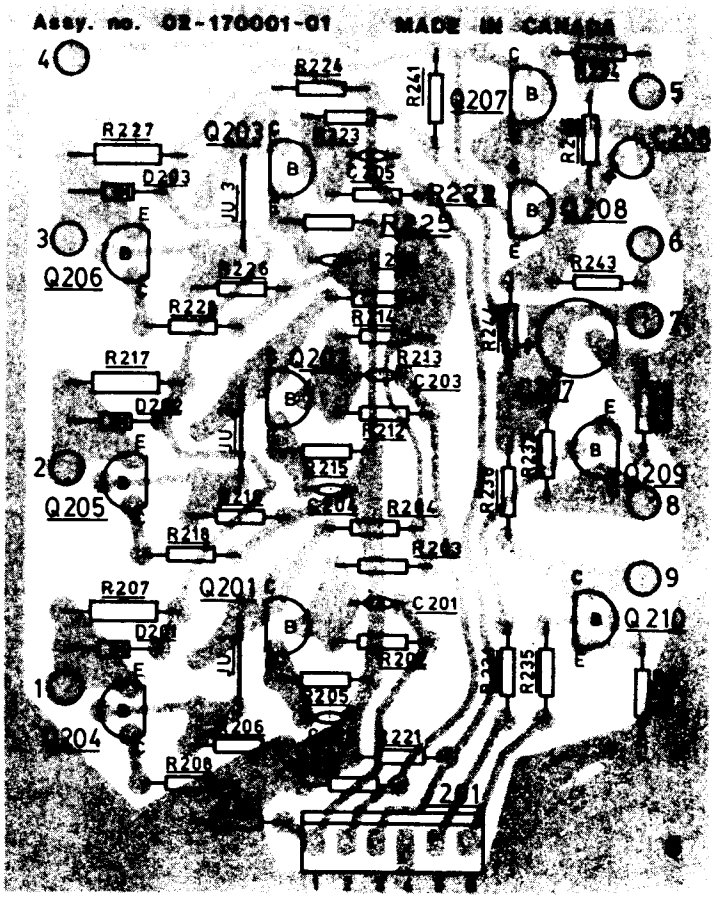

50-1610-01

C.R.T. P.C.B. COMPONENT LAYOUT

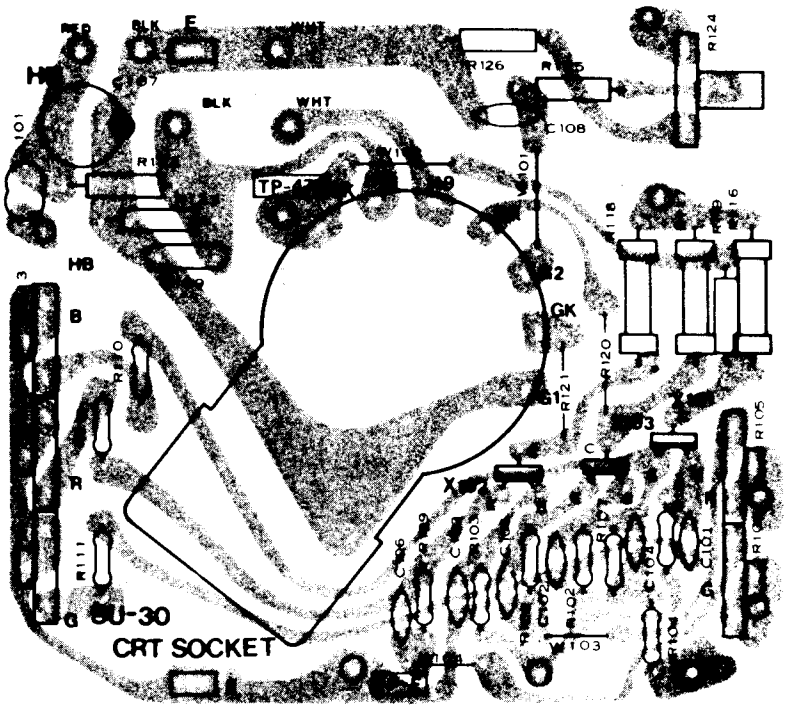

00-18025-02

MAIN P.C.B. COMPONENT LAYOUT

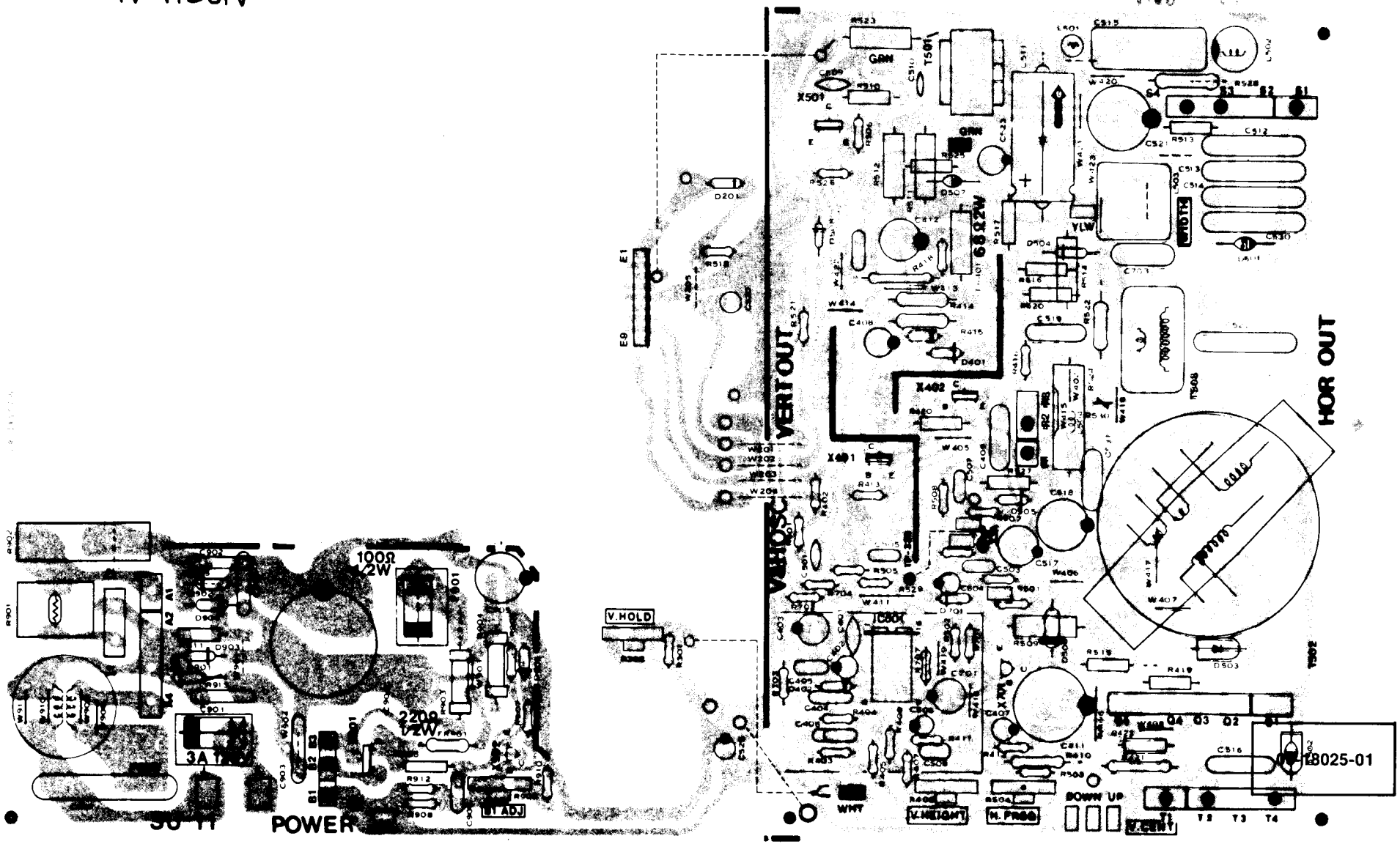

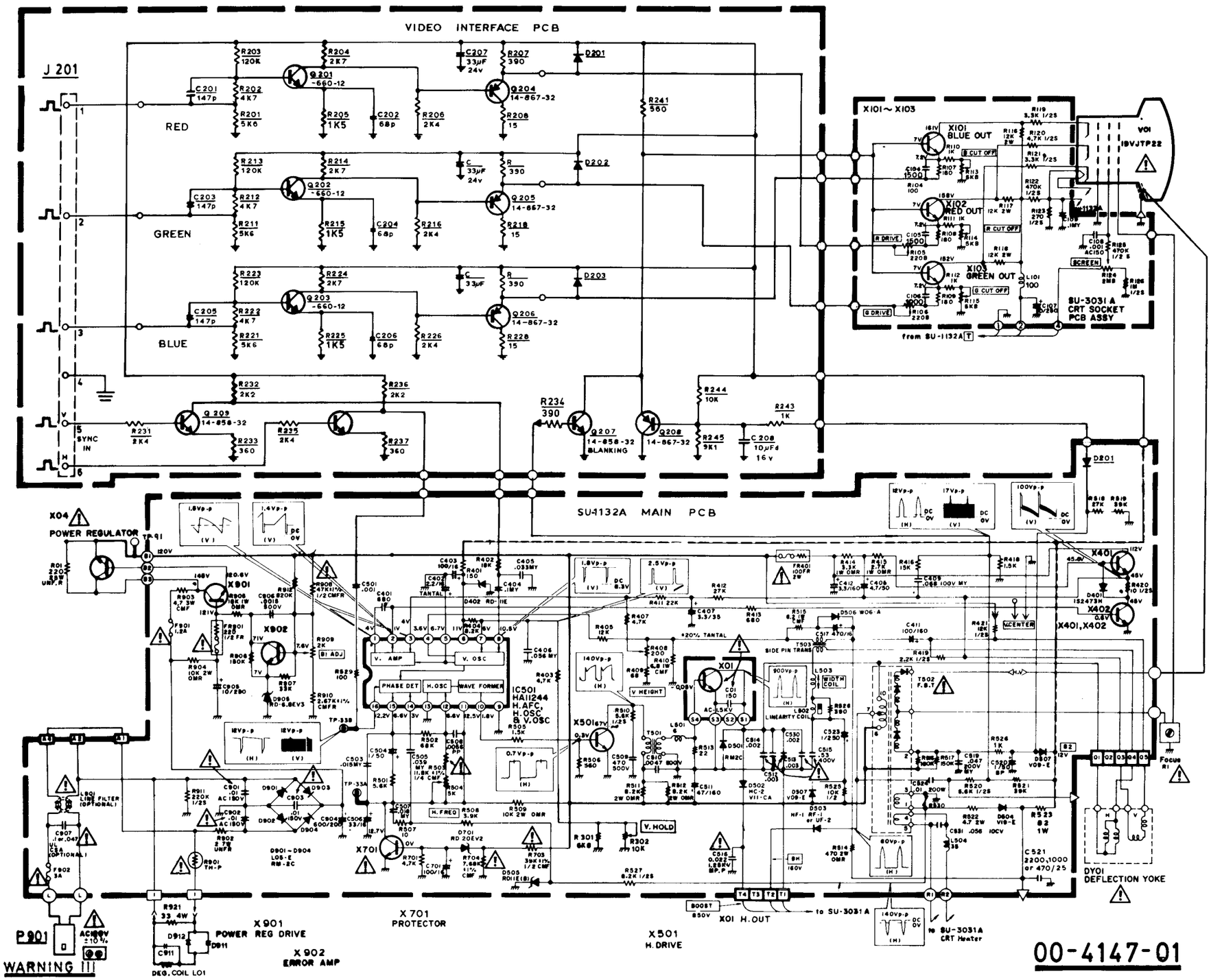

Schematic Notes

Unless otherwise specified
Resistance: (Ω) (K→KΩ, M→MΩ), 1/4 (W) carbon resistor
Capacitance: 1 or higher→ (pF), less than 1→ (μF)
working voltage→ 50 (V)
ceramic capacitor
Inductance: (μH)
Electrolytic Cap: Capacitance Value (μF)/working voltage (V),
NP → non-polar (or bipolar) electrolytic cap.
Refer to the parts list for additional component information.

indicates test point connection

indicates chassis ground unless otherwise specified

Hz indicates cycles per second

For **safety** purposes (and continuing reliability)
⚠ replace all components marked with safety symbol with identical type.
NOTE: FR → fusible resistor

Parts identification on circuit boards:
e.g. SU1126A (R107 = R1107)
SU3030A (R113 = R3113)

00-4147-01

ISSUE 2

REPLACEMENT PARTS LIST

Components identified by the ⚠ symbol in the PARTS LIST and on the Schematic have special characteristics important to safety.

DO NOT degrade the safety of the set through improper servicing.

Abbreviations for Resistors and Capacitors

Resistor

C R	:	Carbon Resistor
Comp. R	:	Composition Resistor
OM R	:	Oxide Metal Film Resistor
V R	:	Variable Resistor
MF R	:	Metal Film Resistor
CMF R	:	Coating Metal Film Resistor
UNF R	:	Nonflammable Resistor
F R	:	Fusible Resistor

Capacitor

C Cap.	:	Ceramic Capacitor
M Cap.	:	Mylar Capacitor
E Cap.	:	Electrolytic Capacitor
BP E Cap.	:	Bi-Polar (or Non-Polar) Electrolytic Capacitor
MM Cap.	:	Metalized Mylar Capacitor
PP Cap.	:	Polypropylene Capacitor
MPP Cap.	:	Metalized PP Capacitor
PS Cap.	:	Polystyrol Capacitor
Tan. Cap.	:	Tantal Capacitor

Symbol	Description	Part Number
	Main P.C.B. Ass'y	SU-1132A
	CRT Socket P.C.B. Ass'y	SU-3031-A
	Complete Chassis (excluding interface P.C.B. Ass'y)	10-138-01
	Interface P.C.B. Ass'y	02-170001-01

Outside of the P.C.B. Ass'y

Symbol	Description	Part Number
⚠ DY01	Deflection Yoke	A29779-D
⚠ T502	Flyback Transf.	A29951-A
	PC Magnet	A75034-B
X01	Si. Transistor	2SC1413AV
X04	Si. Transistor	2SC1106A
V01	CRT (19VJTP22)	17-7198-02
⚠ V11	Focus V. Resistor	C30289
R05	UNF Resistor 220Ω, 25W. K	QRF258K-221
⚠ C01	C Capacitor 150 pF, AC1.5KV	QCZ0101-005

Main P.C.B. Ass'y (SU-1132A) Parts List

Resistors

Symbol	Description	Part Number
R302	V R 10KΩ (V. Hold)	QVZ3224-014
R408	V R 200Ω (V. Height)	QVZ3230-022
R410	CMF R 6.8Ω 1W +5%	QRX019J-6R8
R414	OM R 33.KΩ 1W +5%	QRG019J-332
R415	OM R 2.7 KΩ 1W +5%	QRG019J-272
R421	OM R 12 KΩ 2W +5%	QRG026J-123
⚠ FR401	F R 68Ω 2W +10%	QRH024K-680
⚠ R503	CMF R 11.8 KΩ ¼W +1%	QRV141F-1182
R504	V R 5 KΩ (H. Freq.)	QVZ3230-053
R509	OM R 10KΩ 2W +5%	QRG0267-103
R511	OM R 8.2KΩ 2W +5%	QRG026J-822
R512	OM R 8.2KΩ 2W +5%	QRG026J-822
R514	OM R 680Ω 2W +5%	QRG026J-681
R515	CMF R 8.2Ω 1W +5%	QRX019J-8R2

Main P.C.B. Ass'y (cont'd.)

Resistors

Symbol	Description	Part Number
R522	CMF R 4.7Ω 1W +5%	QRX019J-4R7
R523	CMF R 82Ω 2W +5%	QRX026J-820
R528	OM R 390Ω 1W +5%	QRG019J-391
R530	Zinc R 270Ω	ERZ-C05DK-271
R901	Posistor	A75414
R902	UNF R 2Ω 7W +10%	QRF076K-2R0
R903	CMF R 4.7Ω 3W +5%	QRX039J-4R7
R904	OM R 10KΩ 2W +5%	QRG026J-103
R905	OM R 18KΩ 1W +5%	QRG019J-183
⚠ R908	CMF R 47KΩ ½W +1%	QRV122F-4702
R909	V R 2KΩ (B1 Adj.)	QVZ3230-023
⚠ R910	CMF R 2.74KΩ ¼W +1%	QRV142F-2741
⚠ FR901	F R 220Ω ½W +10%	QRH124K-221
⚠ R703	CMF R 39KΩ ½W +1%	QRV122F-3902
R704	CMF R 7.68KΩ ¼W +1%	QRV142F-7681

Capacitor

Symbol	Description	Part Number
C402	Tan. Cap. 2.2 μF 16V +10%	QEE51CK-225
C411	E Cap. 100 μF 160V +100%	QEW52CA-107
C412	E Cap. 3.3 μF 160V +100%	QEW52CA-335
C508	PP Cap. 5600pF 50V +5%	QFP31HJ-562
C511	E Cap. 47 μF 160V +100%	QED22CA-476
⚠ C512	PP Cap. 2000pF 1500V +5%	QFZ0082-202
⚠ C513	PP Cap. 2000pF 1500V +5%	QFZ0082-202
⚠ C514	PP Cap. 2000pF 1500V +5%	QFZ0082-202
C515	PP Cap. 0.53 μF 1200V +10%	QFZ0067-534
⚠ C516	MPP Cap. 0.022 μF 1.25KV +10%	QFH63BK-223
C520	BPE Cap. 1 μF 50V +100%	QEN61HA-105
⚠ C522	PP Cap. 2000pF 1500V +5%	QFZ0082-202
C523	E Cap. 1 μF 160V +100%	QEW62CA-105
⚠ C530	PP Cap. 1500pF 1500V +5%	QFZ0082-152
⚠ C901	C Cap. 4700pF AC125V +80% -20%	QCZ9013-472
⚠ C902	C Cap. 4700pF AC125V +80% -20%	QCZ9013-472
C905	E Cap. 10 μF 250V +100%	QEW52EA-106
⚠ C907	MM Cap. 0.1 μF AC150V +80% -20%	QFZ9008-104

Coils

Symbol	Description	Part Number
L501	Peaking Coil	A75360-6
L502	Linearity Coil	A39835
L503	Width Coil	C30380-A
L504	Heater Choke Coil	C30316-A
⚠ L901	Line Filter	A39475-J

Transformers

Symbol	Description	Part Number
T501	Hor. Drive Transf.	A46022-BM
T503	Side Pin. Transf.	C39050-A or C39049-A or C39084-A

Semiconductors

Symbol	Description	Part Number
IC501	I.C.	HA11244
X401	Si. Transistor	2SD478
X402	Si. Transistor	2SD478
X501	Si. Transistor	2SC2371V
X701	Si. Transistor	2SC454(C)
X901	Si. Transistor	2SC2688(K,L,M)
X902	Si. Transistor	2SC1890A;(E,F)
D201	Si. Diode	1S2471V
D401	Si. Diode	1S2473H
D402	Zener Diode	RD11E(B)
D501	Si. Diode	RM2-(c)
D502	Si. Diode	V11-CA
D503	Si. Diode	HF-1
D504	Si. Diode	V19-(E)
D505	Zener Diode	RD11E(B)

Main P.C.B. Ass'y. (cont'd.)

Resistors

Symbol	Description	Part Number
D506	Si. Diode	W06-A
D507	Si. Diode	V09-E
D508	Si. Diode	V09-E
⚠ D701	Zener Diode	RD20EV2
⚠ D901	Si. Diode	RM2-(C)
⚠ D902	Si. Diode	RM2-(C)
⚠ D903	Si. Diode	RM2-(C)
⚠ D904	Si. Diode	RM2-(C)
⚠ D905	Zener Diode	RD68EV3

Miscellaneous

Symbol	Description	Part Number
⚠ F901	UL Fuse 1.2A	QMF66U1-1R2S
⚠ F902	UL Fuse 3A	QMF66U1-3R0s

CRT Socket P.C.B. Ass'y (SU-3031A) Parts List

Symbol	Description	Part Number
Resistors		
R015	V R 200Ω (R Drive)	QVZ3224-022
R106	V R 200Ω (G Drive)	QVZ3224-022
R113	V R 5KΩ (B Cut off)	QVZ3224-053
R114	V R 5KΩ (R Cut off)	QVZ3224-053
R115	V R 5KΩ (G Cut off)	QVZ3224-053
R116	DM R 12KΩ, 2W, +5%	QRG029J-123
R117	DM R 12KΩ, 2W, +5%	QRG029J-123
R118	DM R 12KΩ, 2W, +5%	QRG029J-123
R124	V R 2MΩ (Screen)	QVZ3243-026

Capacitors

Symbol	Description	Part Number
C107	E Cap. 10 μF 250V +100%	QEW52EA-106

Coils

Symbol	Description	Part Number
L101	Peaking Coil	QQL043K-101

Semiconductors

Symbol	Description	Part Number
X101	Si. Transistor	2SC2611
X102	Si. Transistor	2SC2611
X103	Si. Transistor	2SC2611

Miscellaneous

Symbol	Description	Part Number
⚠	CRT Socket	A76068

Video Interface P.C.B. Assembly 02-170001-01

Semiconductors

Symbol	Description	Part Number
D201	Diode	14-514-64
D202	Diode	14-514-64
D203	Diode	14-514-64
Q201	Transistor	14-802-12
Q202	Transistor	14-802-12
Q203	Transistor	14-802-12
Q204	Transistor	14-867-32
Q205	Transistor	14-867-32
Q206	Transistor	14-867-32
Q207	Transistor	14-802-12
Q208	Transistor	14-867-32
Q209	Transistor	14-802-12
Q210	Transistor	14-802-12

Video Interface P.C.B. Assembly (cont'd.)

Resistors

Symbol	Description	Part Number
R201	Resistor 5.6K ¼W 5%	40-125625-11
R202	Resistor 4.7K ¼W 5%	40-124725-11
R203	Resistor 120K ¼W 5%	40-121245-11
R204	Resistor 2.7K ¼W 5%	40-122725-11
R205	Resistor 1.5K ¼W 5%	40-121525-11
R206	Resistor 2.4K ¼W 5%	40-122425-11
R207	Resistor 390Ω ½W 5%	40-223915-11
R208	Resistor 15Ω ¼W 5%	40-121505-11
R211	Resistor 5.6K ¼W 5%	40-125625-11
R212	Resistor 4.7K ¼W 5%	40-124725-11
R213	Resistor 120K ¼W 5%	40-121245-11
R214	Resistor 2.7K ¼W 5%	40-122725-11
R215	Resistor 1.5K ¼W 5%	40-121525-11
R216	Resistor 2.4K ¼W 5%	40-122425-11
R217	Resistor 390Ω ½W 5%	40-223915-11
R218	Resistor 15Ω ¼W 5%	40-121505-11
R221	Resistor 5.6K ¼W 5%	40-125625-11
R222	Resistor 4.7K ¼W 5%	40-124725-11
R223	Resistor 120K ¼W 5%	40-121245-11
R224	Resistor 2.7K ¼W 5%	40-122725-11
R225	Resistor 1.5K ¼W 5%	40-121525-11
R226	Resistor 2.4K ¼W 5%	40-122425-11
R227	Resistor 390Ω ½W 5%	40-223915-11
R228	Resistor 15Ω ¼W 5%	40-121505-11
R231	Resistor 2.4K ¼W 5%	40-122425-11
R232	Resistor 2.2K ¼W 5%	40-122225-11
R233	Resistor 360Ω ¼W 5%	40-123615-11
R234	Resistor 360Ω ¼W 5%	40-123615-11
R235	Resistor 2.4K ¼W 5%	40-122425-11
R236	Resistor 2.2K ¼W 5%	40-122225-11
R237	Resistor 360Ω ¼W 5%	40-123615-11
R241	Resistor 560Ω ¼W 5%	40-125615-11
R243	Resistor 1K ¼W 5%	40-121025-11
R244	Resistor 10K ¼W 5%	40-121035-11
R245	Resistor 9.1K ¼W 5%	40-129125-11

Capacitors

Symbol	Description	Part Number
C201	Ceramic Cap. 47pF	46-347013-15
C202	Ceramic Cap. 68pF	46-368013-15
C203	Ceramic Cap. 47pF	46-347013-15
C204	Ceramic Cap. 68pF	46-368013-15
C205	Ceramic Cap. 47pF	46-347013-15
C206	Ceramic Cap. 68pF	46-368013-15
C207	Electrolytic 100 μF 35V	44-310104-04
C208	Electrolytic 10 μF 16V	44-310003-02

Miscellaneous

Symbol	Description	Part Number
J201	Molex 6-pin Wafer	34-548-06

Purity Shield Assembly 07-220083-03

Symbol	Description	Reference No.
X	Degaussing Coil	21-1007-30
D911	Rectifier 1A 600V	28-22-27
D912	Rectifier 1A 600V	28-22-27
C911	150 μF 10% 400V. Cap.	48-171544-62
R921	4W 33R 10% WW Res.	42-113301-03
X	Fire Ret Term Strip 4 Lug.	34-492-09