REVISIONS				
REV	ECO	DESCRIPTION	BY/DATE	CHK/DATE
EA		PROTOTYPE	DLE/11DEC98	
A	4890	PRODUCTION RELEASE	DLE/08FEB99	

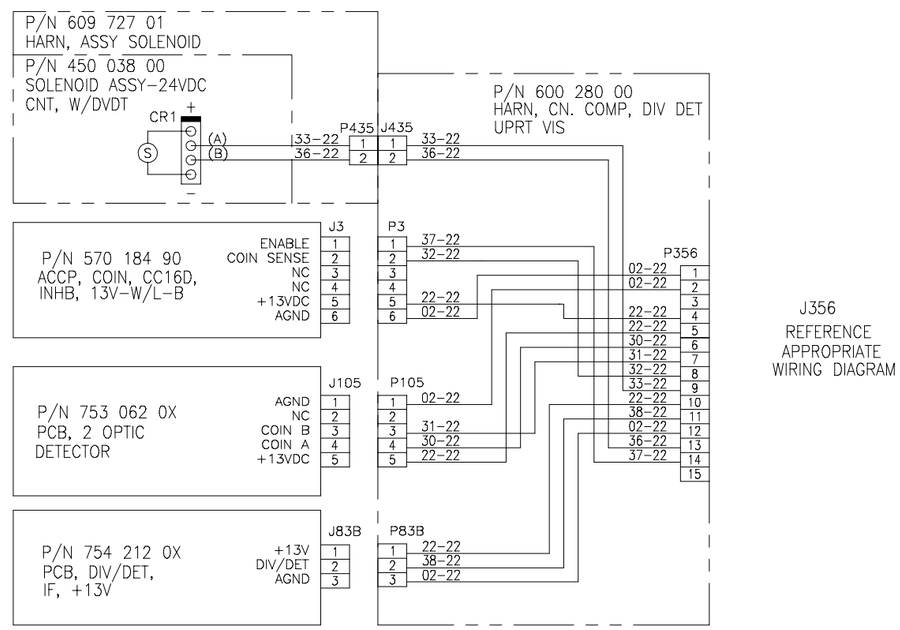

WIRING IDENTIFICATION

XX-XX
- GAUGE
- STRIPE COLOR (TRACER)
- BODY COLOR

Example: 35-22
Orange w/Green Stripe-22 Gauge

COLOR CODE
0-BLACK
1-BROWN
2-RED
3-ORANGE
4-YELLOW
5-GREEN
6-BLUE
7-VIOLET
8-GREY
9-WHITE

ALL DESIGN, OPERATIVE AND PROCESS DATA PERTAINING TO THE ARTICLE SHOWN ON THIS SHEET IS THE PROPERTY OF INTERNATIONAL GAME TECHNOLOGY, RENO, NEVADA. THIS INFORMATION IS DISCLOSED IN CONFIDENCE AND IS NOT TO BE COPIED, REPRODUCED, REVEALED TO OR APPROPRIATED BY OTHERS, IN PART OR IN WHOLE, WITHOUT THE EXPRESS CONSENT OF IGT. THIS PRINT IS LOANED AND RECIPIENT COVENANTS IT WILL NOT BE USED IN ANY MANNER DETRIMENTAL TO THE INTEREST OF IGT, AND MUST BE RETURNED ON DEMAND.

International Game Technology
9295 Prototype Drive Reno NV 89511, Phone: 702-448-7777

TITLE: DIAGRAM, WIRING CN.COMP.DIV/DET VISION

DRAWN	DATE	CHECKED	DATE	APPRVD	DATE	SCALE	SHT
DLE	11DEC98					NONE	1 OF 1

DWG. SIZE	DWG. NO.	REV LTR
C	820 490 13	A

DWG NO. 820 490 13