MODULE 14

MK14-EVMOD-0005

SCHEMATICS

Bally Gaming and Systems

©2003 BALLY GAMING AND SYSTEMS ALL RIGHTS RESERVED

6601 South Bermuda Road Las Vegas, NV 89119

For Customer Service and Information:
+1-702-896-7772 outside the U.S.
1-877-GO BALLY (877) 462-2559 in the U.S. and Canada
896-7772 in Las Vegas
FAX +1-702-896-7710
or visit our website at http://www.ballygaming.com

Module 14 — Schematics Table of Contents

Cabinet 14-5

IOP Board AS-03356-0507 14-5
IOP Board AS-03356-0548 14-16
IOP Board AS-03356-0537 14-16
IOP Board AS-03356-0625 14-16
Backplane Board AS-03356-0501 14-17
Backplane Board AS-03356-0501 14-18
Backplane Board AS-03356-0560 14-19
Power Distribution Board AS-03356-0505 14-21
Power Distribution Board AS-03356-0513 14-22

Door 14-23

Door Optic Emitter and Detector Board AS-03356-0427 and AS-03356-0428 14-23

Bill Acceptor 14-24

LED Board, JCM WBA AS-03356-0431 14-24

Coin Acceptor 14-25

Coin Optic Decoder Board AS-03356-0303 14-25

Printer 14-26

LED Board, Seiko Printer AS-03356-0528 14-26
Serial Printer Interface Board AS-03356-0500 14-27

Hopper 14-28

Hopper Controller Board, FET, Dual Optic AS-03356-0368 14-28

CPU

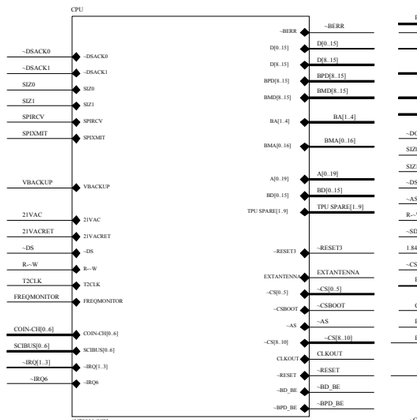

MEMORY

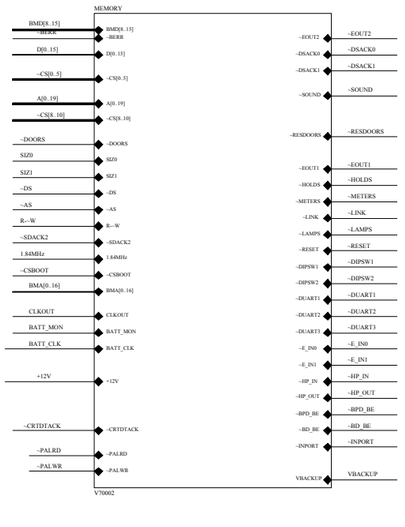

INPUTS

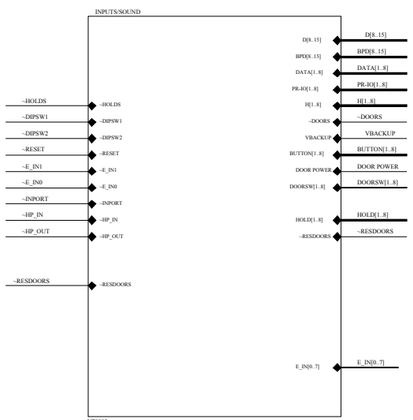

VIDEO

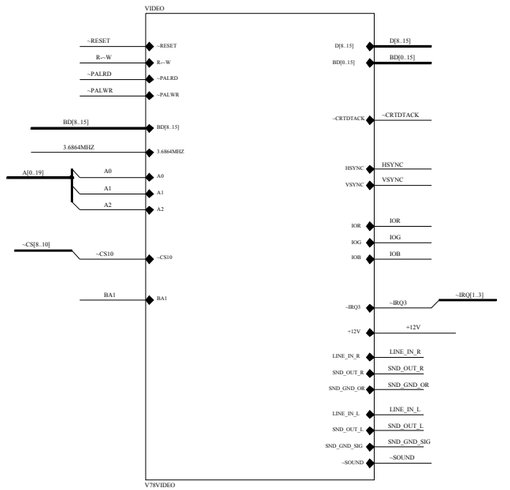

OUTPUTS

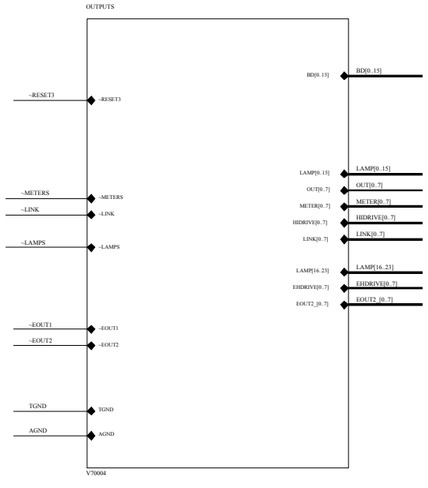

SERIAL

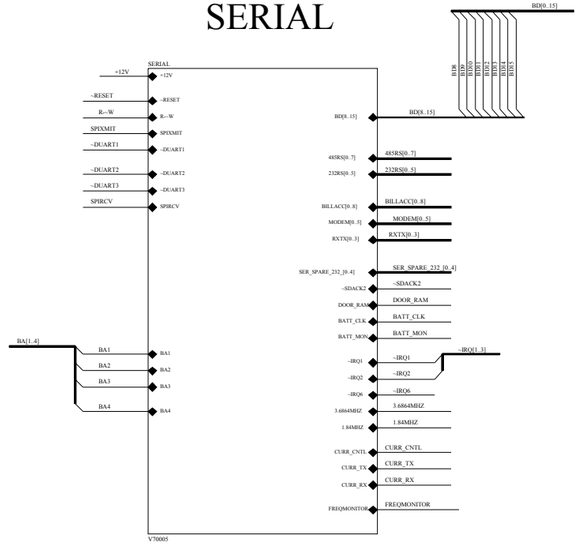

CONNECTORS

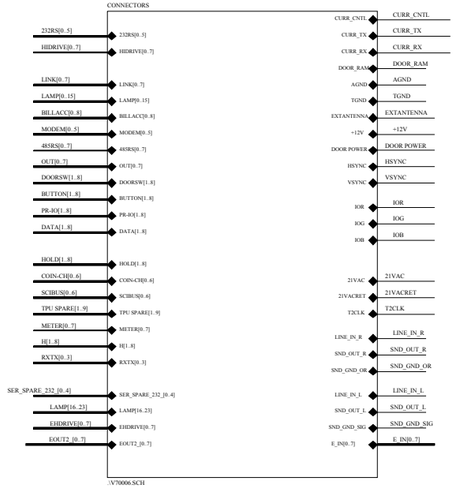

SCHEMATIC, V8700 IOP BOARD
W-01299-0507

V87 EVO IOP SCHEMATIC

©2003 Bally Gaming and Systems

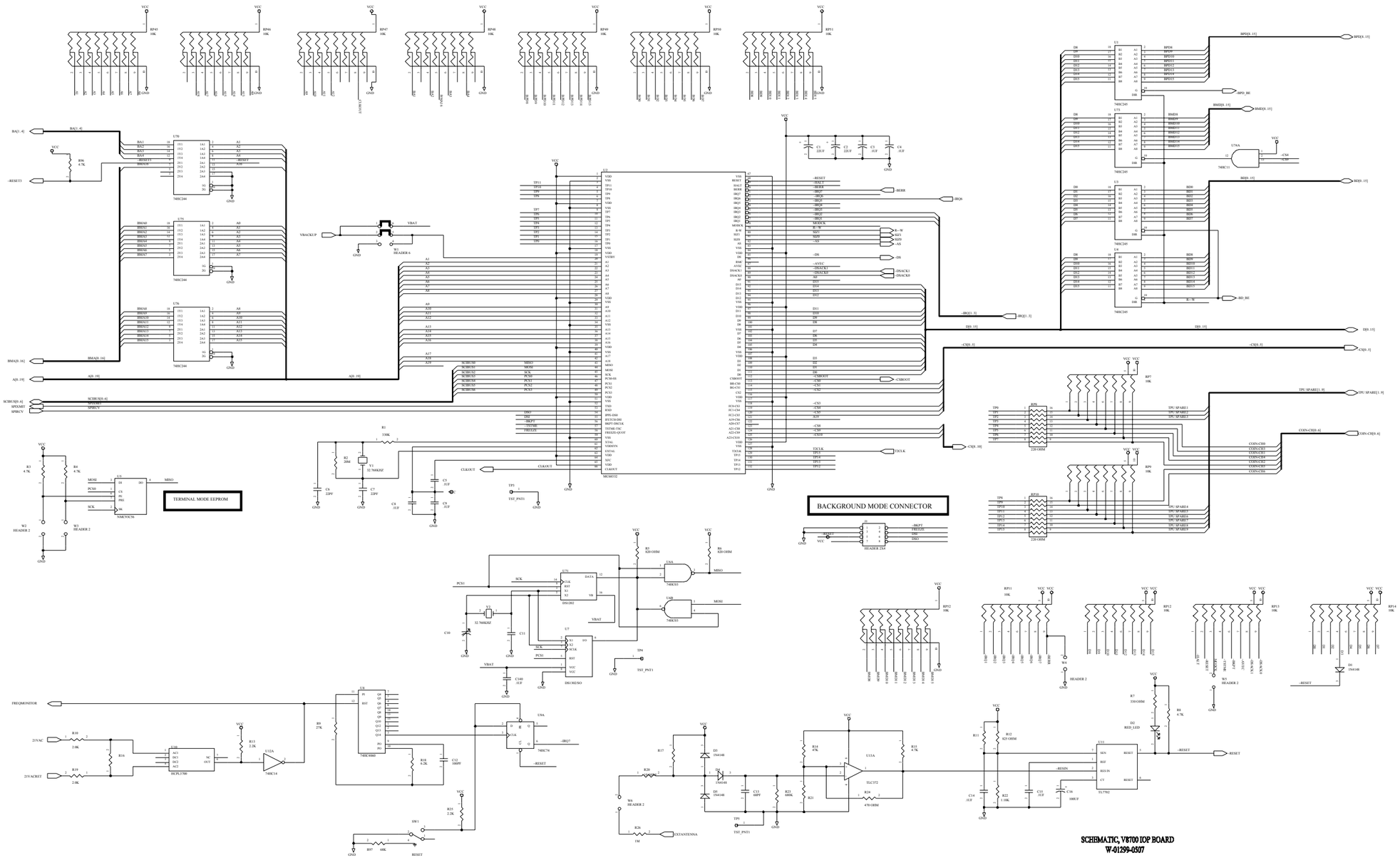
TERMINAL MODE EEPROM
BACKGROUND MODE CONNECTOR
SCHEMATIC, V8700 IOP BOARD
W-01299-0507

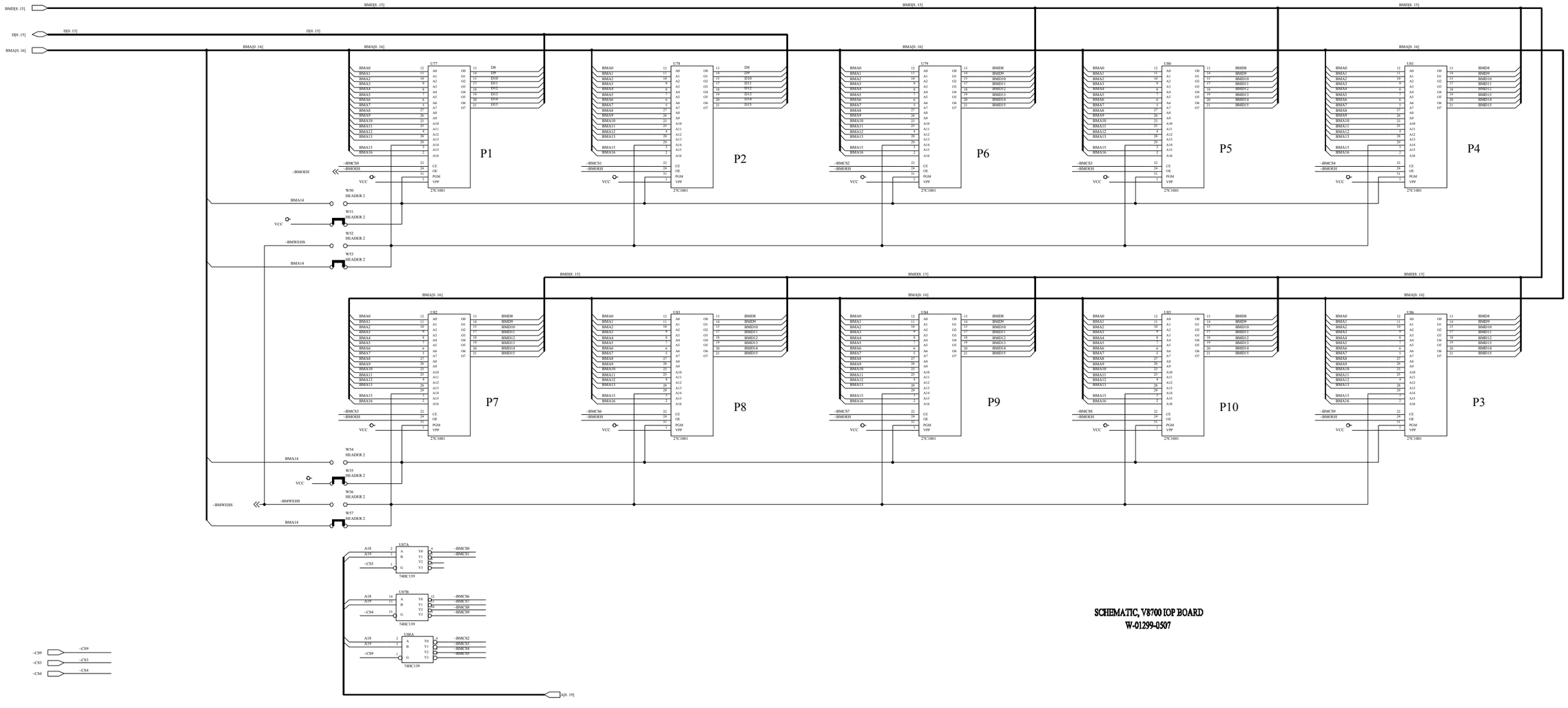

©2003 Bally Gaming and Systems

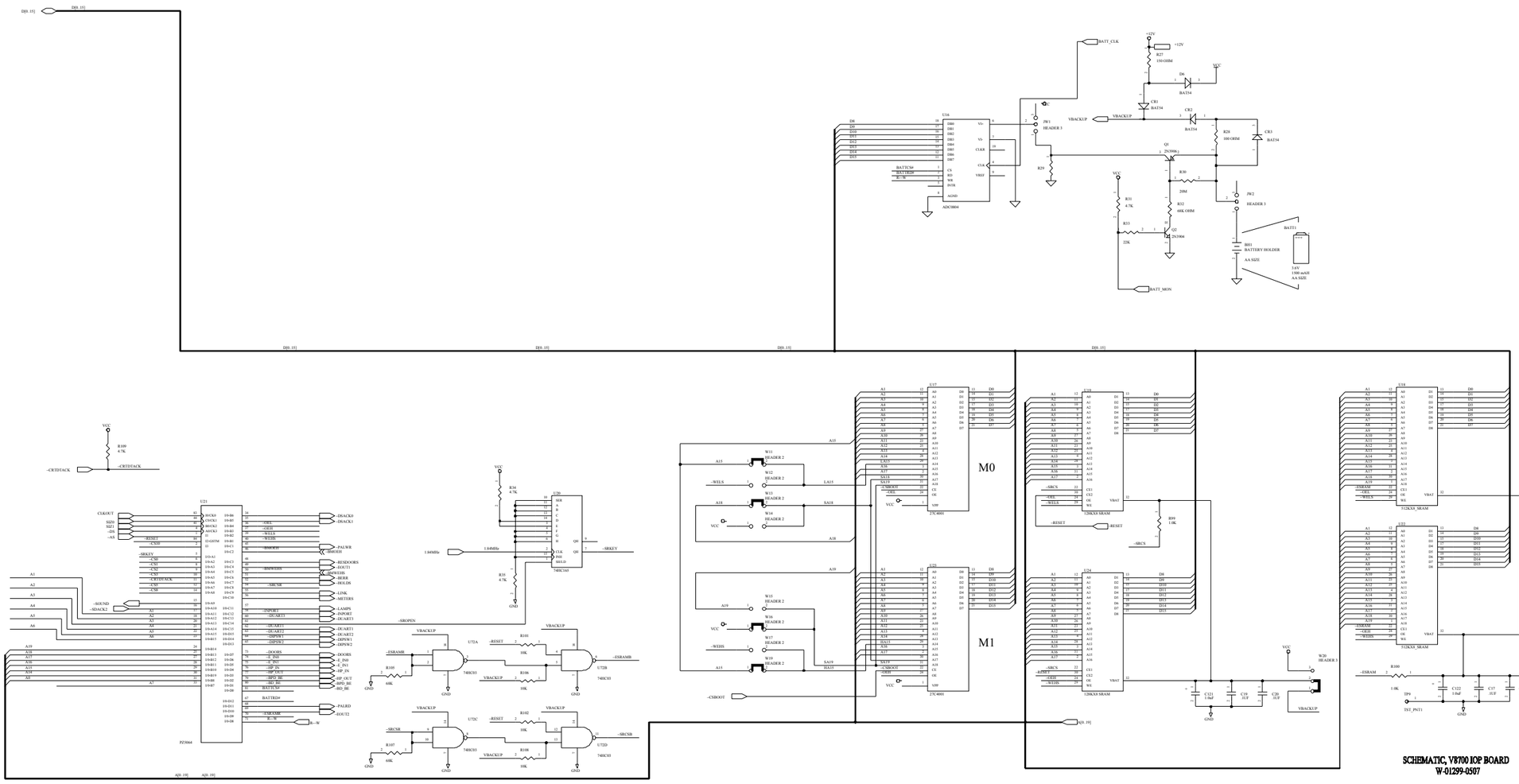

SCHEMATIC, V8700 IOP BOARD
W-01299-0507

©2003 Bally Gaming and Systems

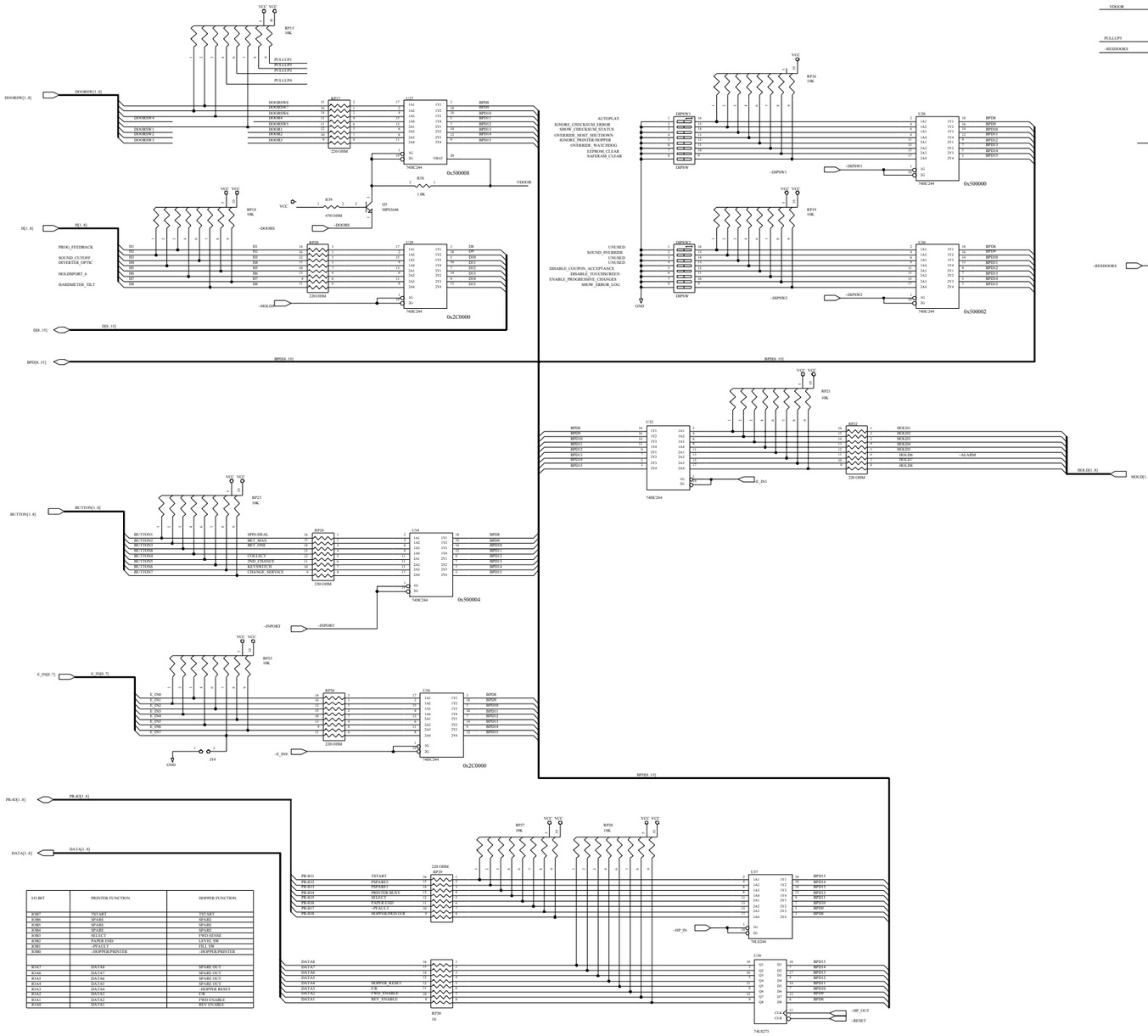

I/O BIT	PRINTER FUNCTION	HOPPER FUNCTION
IO07	TSTART	TSTART
IO06	SPARE	SPARE
IO05	SPARE	SPARE
IO04	SPARE	SPARE
IO03	PAPER END	FWD SENSE
IO02	PAPER END	12VEL SW
IO01	-PFAULT	FILL SW
IO00	-HOPPER/PRINTER	-HOPPER/PRINTER
IOA7	DATA8	SPARE OUT
IOA6	DATA7	SPARE OUT
IOA5	DATA6	SPARE OUT
IOA4	DATA5	SPARE OUT
IOA3	DATA4	HOPPER RESET
IOA2	DATA3	E/R
IOA1	DATA2	FWD ENABLE
IOA0	DATA1	REV ENABLE

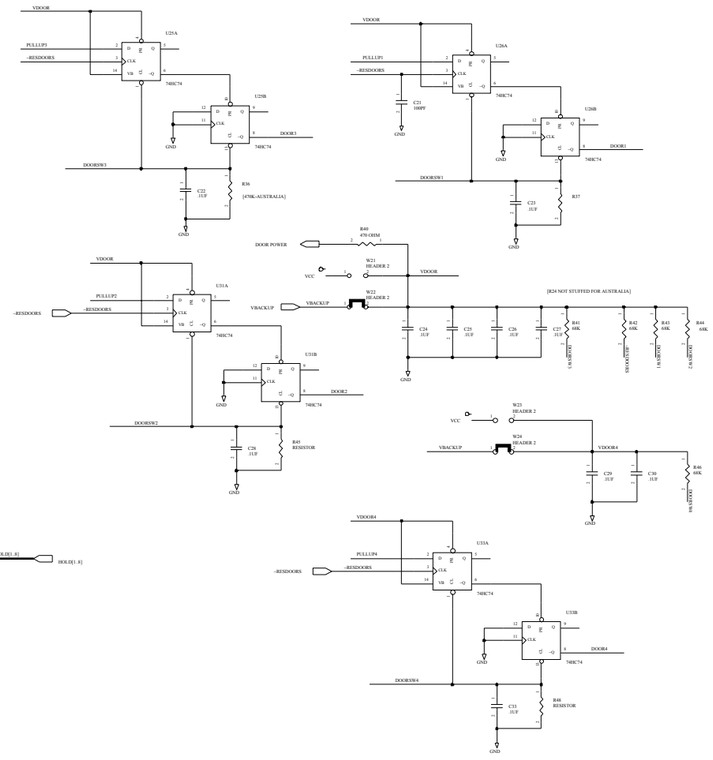

SCHEMATIC, V8700 IOP BOARD
W-01299-0507

©2003 Bally Gaming and Systems

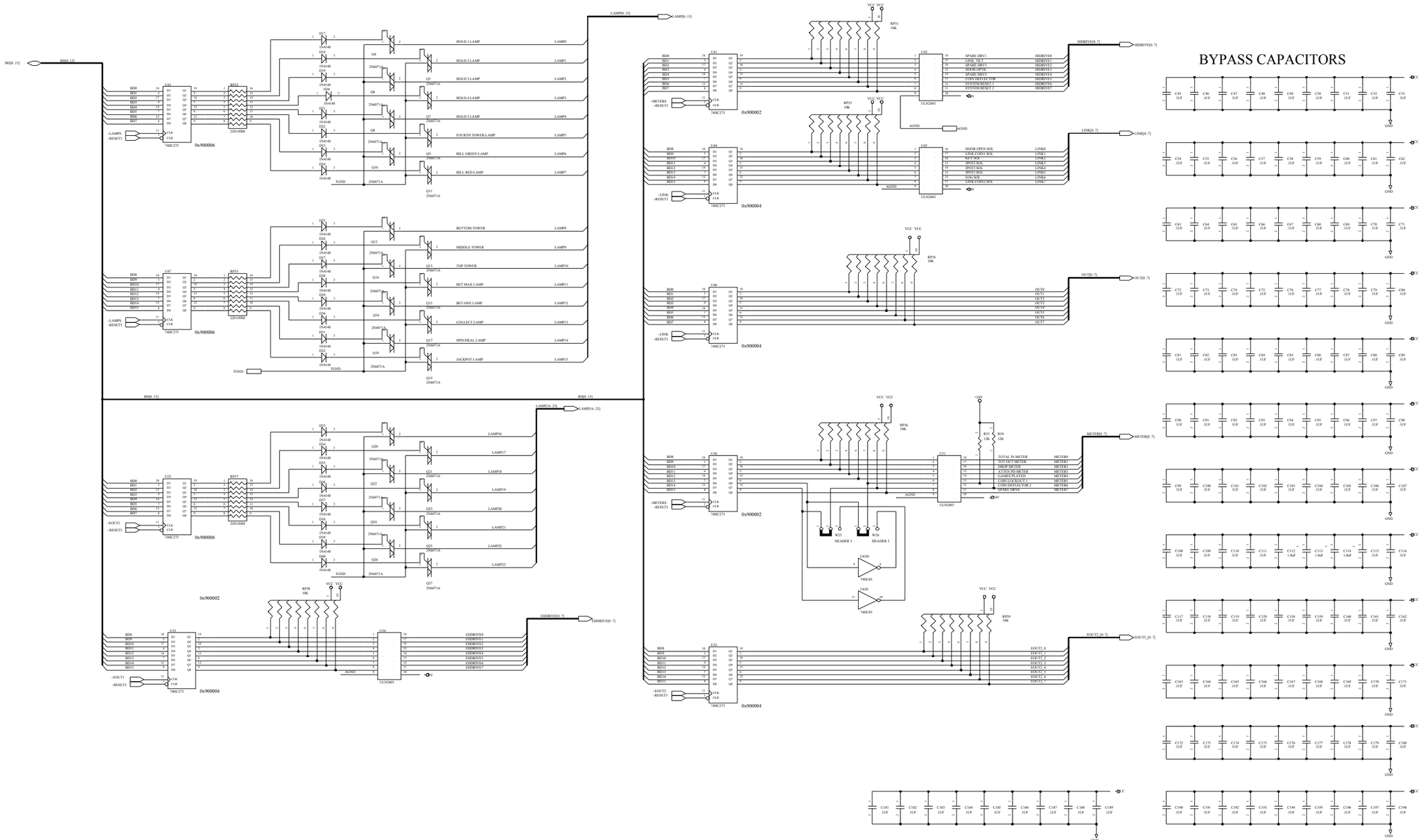

SCHEMATIC, V8700 IOP BOARD
W-01299-0507

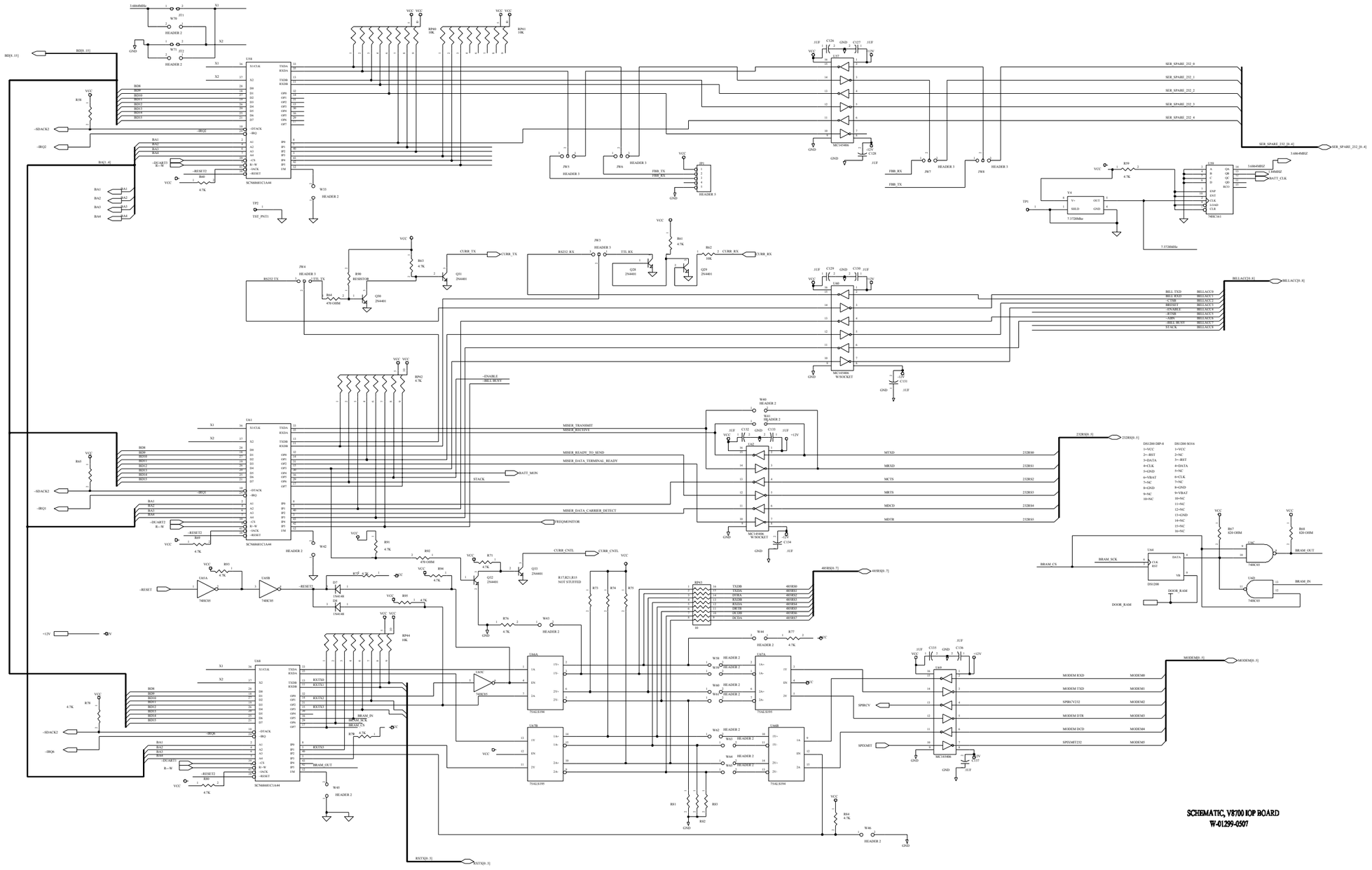

©2003 Bally Gaming and Systems

P1

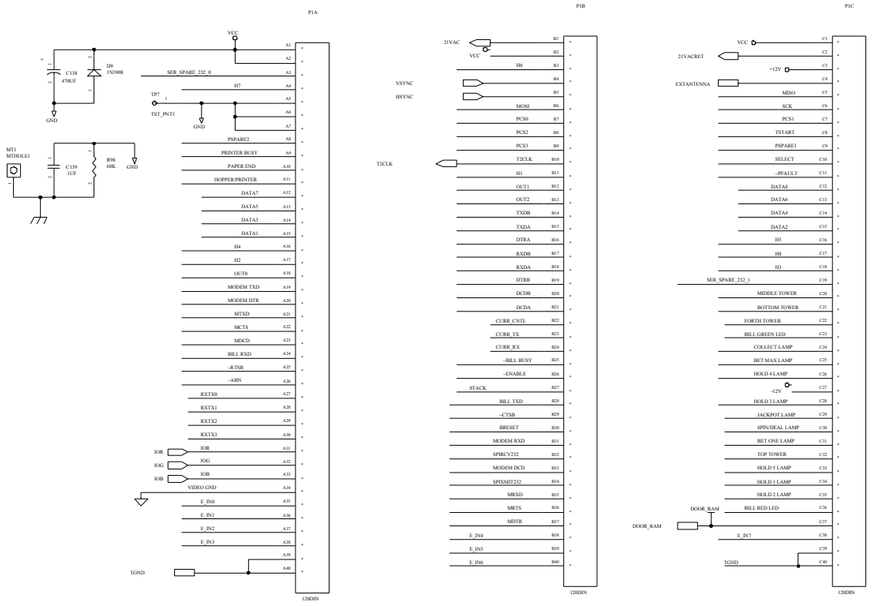

P2

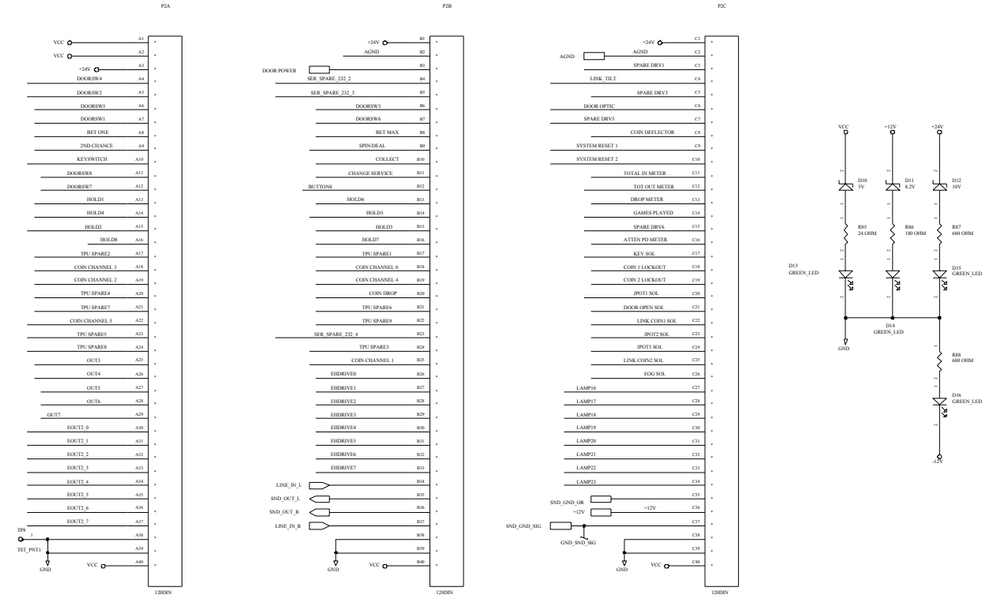

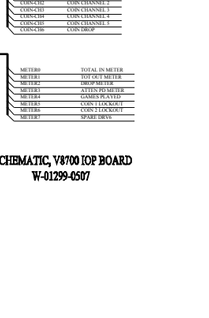

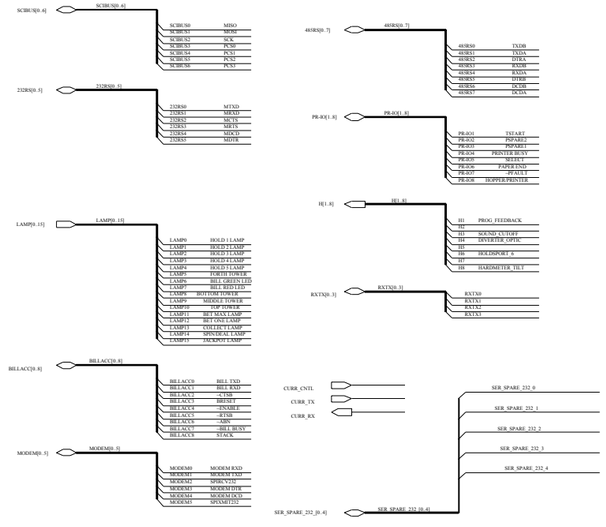

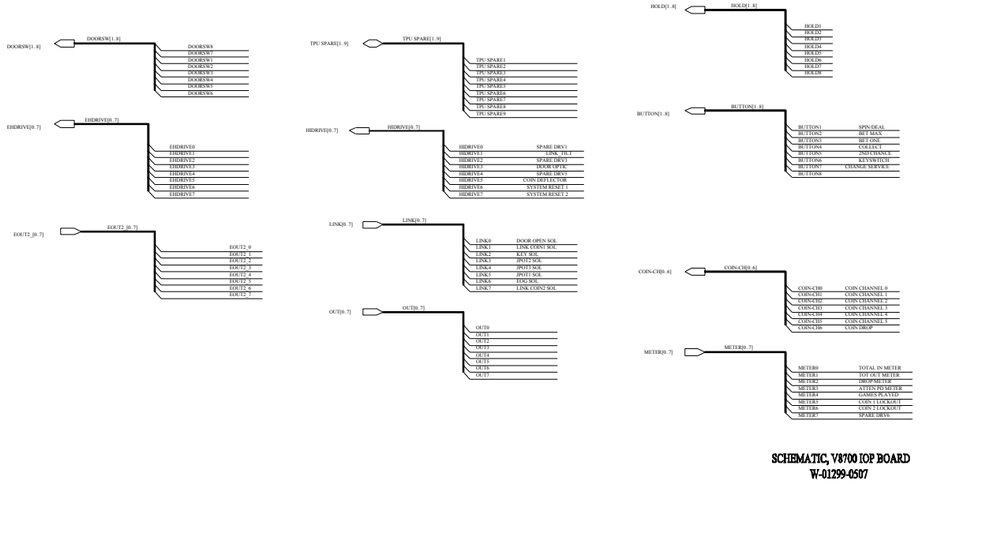

SCHEMATIC, V8700 IOP BOARD
W-01299-0507

©2003 Bally Gaming and Systems

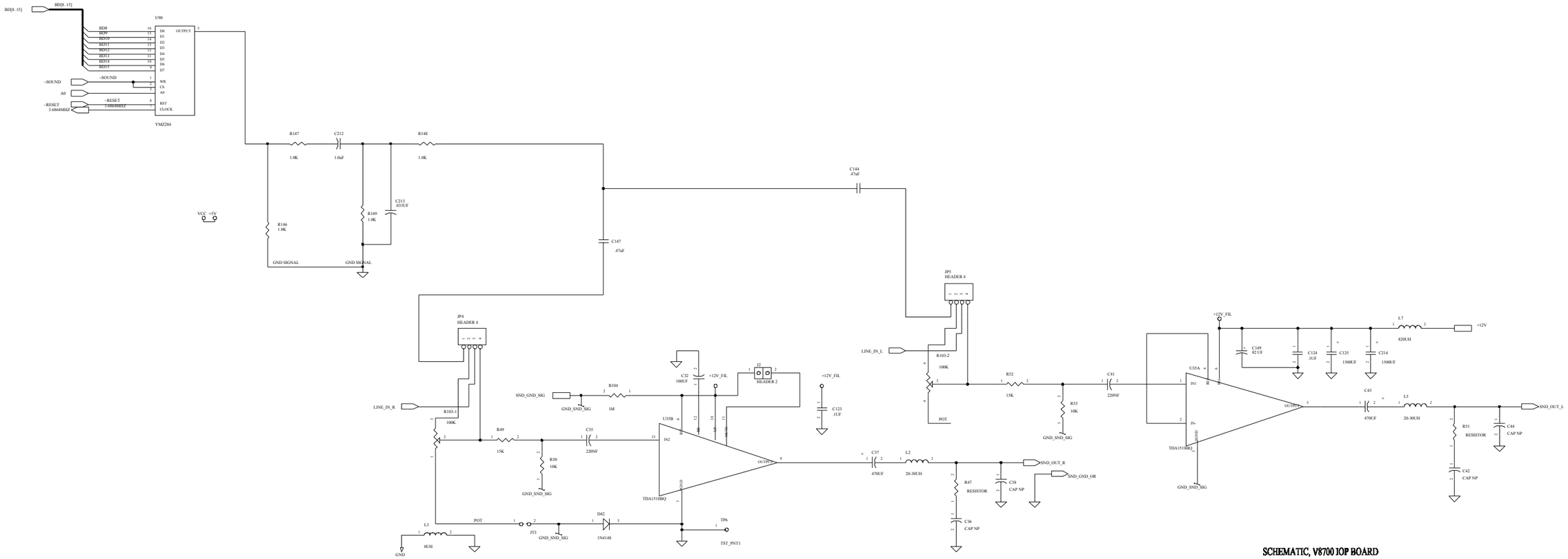

SCHEMATIC, V8700 IOP BOARD
W-01299-0507

©2003 Bally Gaming and Systems

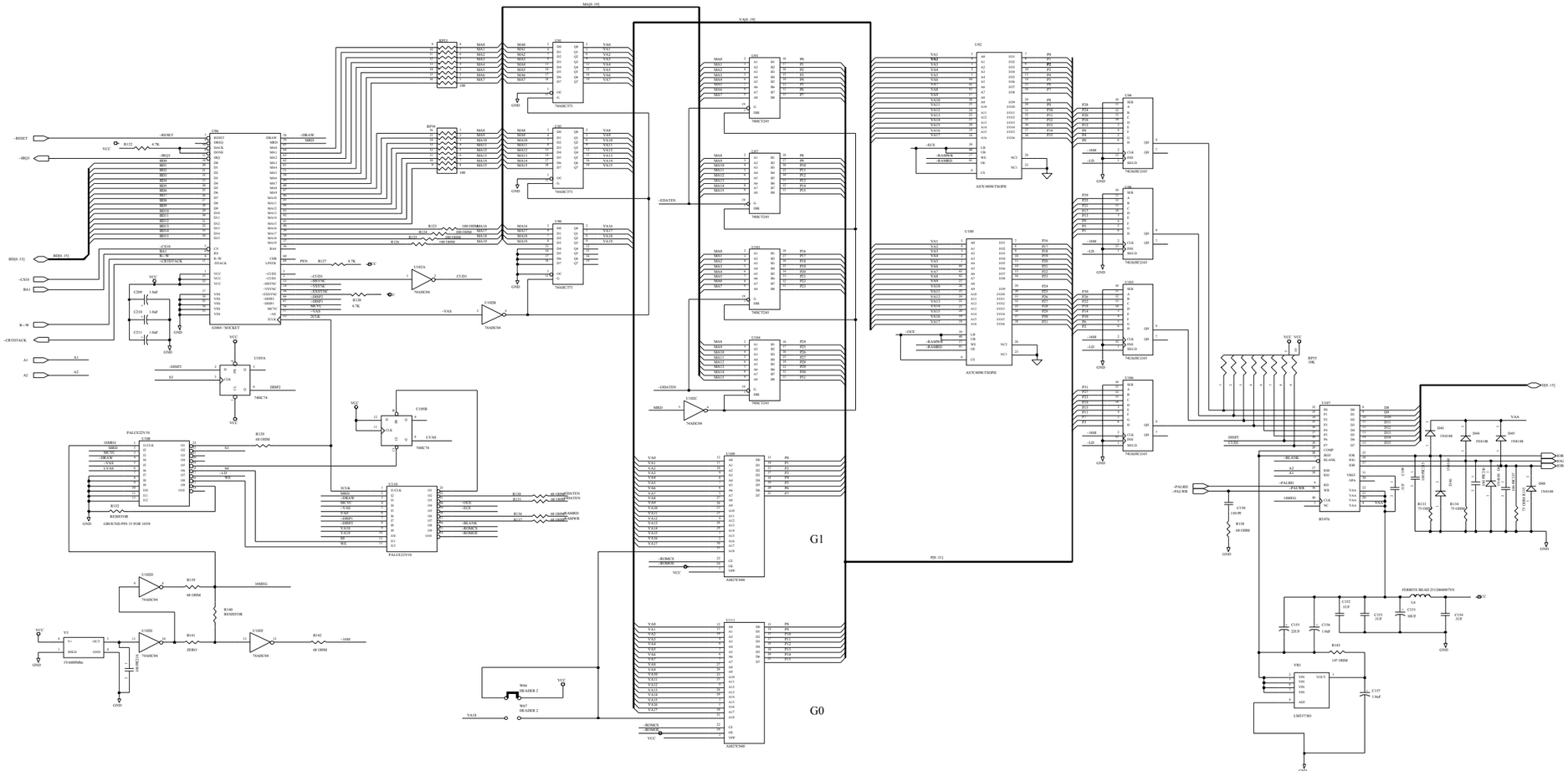

SCHEMATIC, V8700 IOP BOARD
W-01299-0507

Cabinet (cont.)

IOP Board (cont.) AS-03356-0507

☑V8717 ☑V8719 ☑Slant

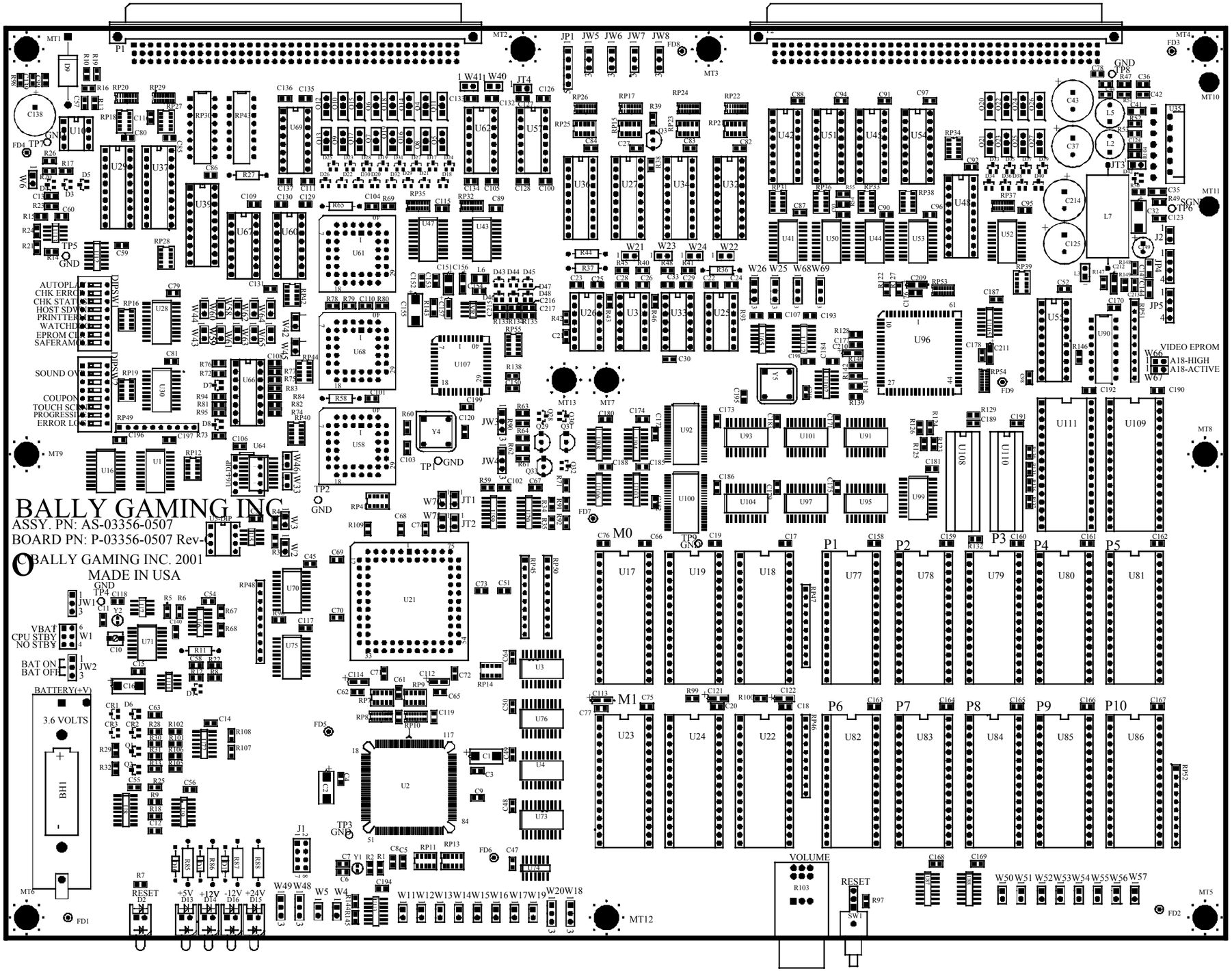

©2003 Bally Gaming and Systems

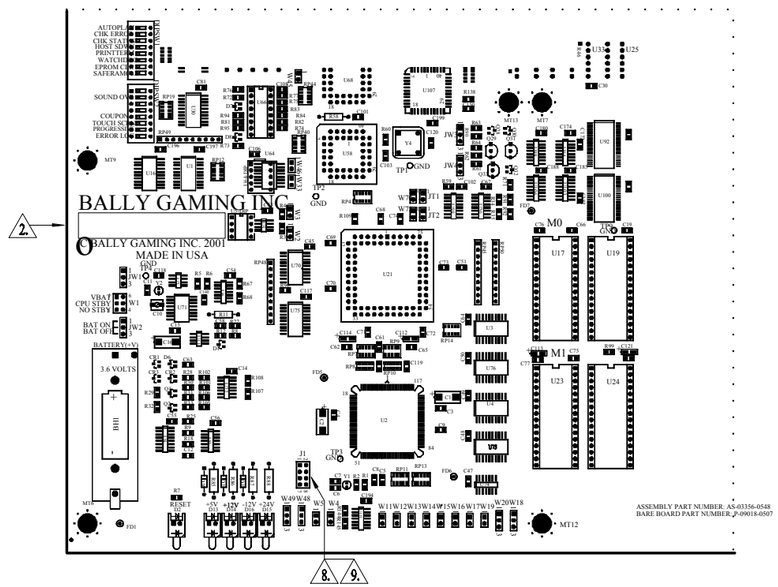

NOTES:

1. PLACE ASSEMBLED BOARD IN STATIC BAG

2. LABEL WITH AS-03356-0548 PART NO., REVISION, VENDOR INDENTIFICATION AND DATE CODE. PLACE THE LABEL OVER THE EXISTING INFORMATION AT THE LOCATION NOTED ABOVE.

3. BAG AND TAG FOR INVENTORY.

4. MUST BE SUITABLY PACKAGED TO PREVENT DAMAGE DURING SHIPPING.

5. FOR PARTS Q4-Q27 2N6070A MT1 IS PIN 1 (SQUARE PAD).

6. PLACE LBL-00110-001A LABEL, SILICON SOFTWARE, ON U18 WITH THE TOP OF THE LABEL TOWARDS THE TOP OF THE BOARD.

7. VERIFY THAT U66=LTC487, U67=LTC489,U37=74LS244,U39=74LS273.

8. INSTALL 8 PIN HEADER, BALLY P/N HEDR-S2100-0008, AT LOCATION J1

9. PLUG JUMPER E-00664-0618 ONTO HEADER AT J1

ASSY V8700 IOP BOARD
MISSISSIPPI (MSUS)
AS-03356-0548

REFERENCE DRAWINGS:

W-01299-0507

ASE-03356-0548

P-09018-0507

M-02045-0507

ASSY V8700 IOP BOARD
AUDIO ASSIST
AS-03356-0625

REFERENCE DRAWINGS:

W-01299-0507	SCHEMATIC
ASE-03356-0507	BILL OF MATERIAL
P-09018-0507	FAB. DRAWING
M-02045-0507	ARTWORK FILE

NOTES:

1. THIS BOARD IS A CURRENT REVISION AS-03356-0507 WHICH HAS UNDERGONE THE FOLLOWING MODIFICATION:

   A. ON SOLDER SIDE OF BOARD CUT THE TRACE FROM POT R103 PIN 1 TO PIN 4.
   B. ON SOLDER SIDE OF BOARD CUT THE TRACE ON JT3.
   C. ON JP4 MOVE JUMPER FROM PINS 2 AND 3, TO 3 AND 4.
   D. ON JP5 MOVE JUMPER FROM PINS 2 AND 3, TO 3 AND 4.

2. IDENTIFY WITH BALLY PART NUMBER AS-03356-0625, REVISION CODE TO BE REVISION OF AS-03356-0507, VENDOR INDENTIFICATION AND DATE CODE.

3. PARTS MUST BE SUITABLY PACKAGED TO PREVENT DAMAGE DURING SHIPPING.

4. PLACE ASSEMBLED BOARD IN STATIC BAG

©2003 Bally Gaming and Systems

Cabinet (cont.)

IOP Board	AS-03356-0548
	☑V8717 ☑V8719 ☑Slant
IOP Board	AS-03356-0537
	☑V8717 ☑V8719 ☑Slant
IOP Board	AS-03356-0625
	☑V8717 ☑V8719 ☑Slant

NOTES:

1. THIS BOARD IS A CURRENT REVISION AS-03356-0507 WHICH HAS UNDERGONE THE FOLLOWING MODIFICATION:

   A. REMOVE HEADERS W16,W17,W18,W19,W20.
   B. INSTALL A SOLID UNINSULATED JUMPER WIRE FROM TOP OF THE BOARD AT LOCATIONS W18 PINS 2 TO 3, AND W19 , W20 PINS 1 TO 2.

1. IDENTIFY WITH BALLY PART NUMBER AS-03356-0537, REVISION CODE TO BE REVISION OF AS-03356-0507, VENDOR INDENTIFICATION AND DATE CODE.
2. PARTS MUST BE SUITABLY PACKAGED TO PREVENT DAMAGE DURING SHIPPING.

REFERENCE DRAWINGS

W-01299-0507
M-02045-0507
ASE-03356-0507

ASSY V8700 IOP BOARD
DUAL LOCK CALIF. MAPS

AS-03356-0537

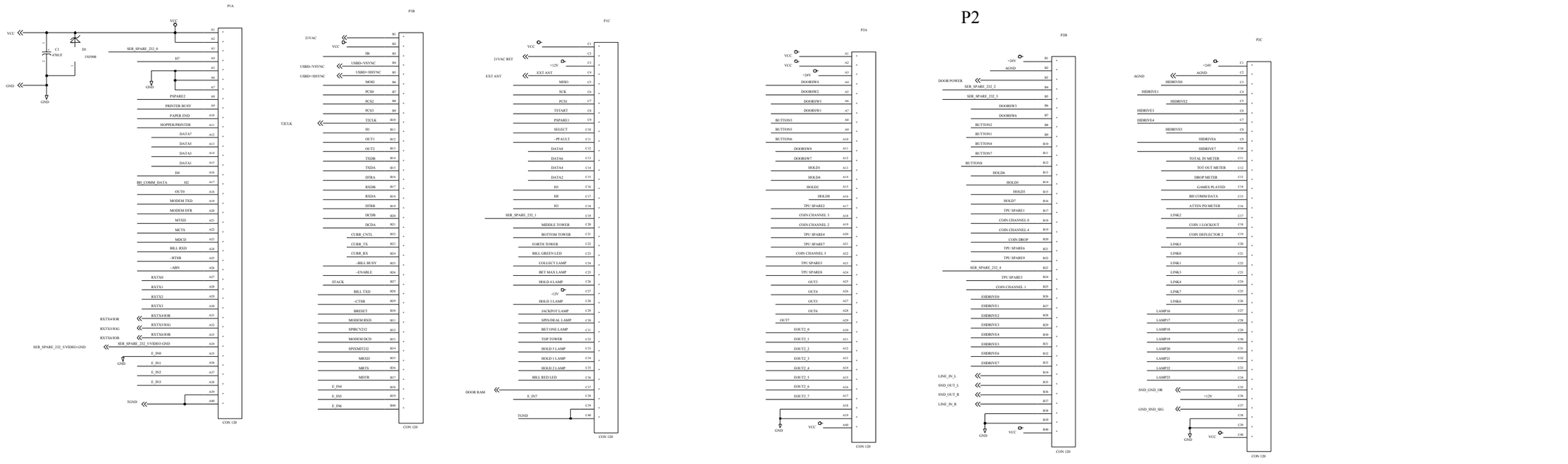

SCHEMATIC, V8700 BACKPLANE
Document Number
W-01299-0101/304

©2003 Bally Gaming and Systems

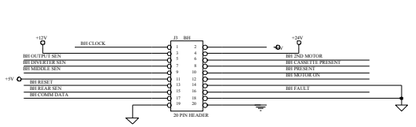

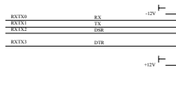

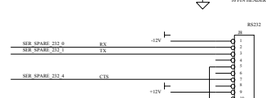

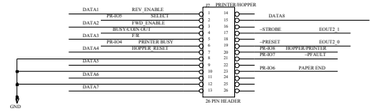

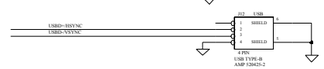

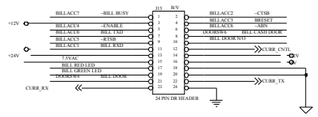

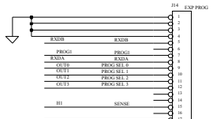

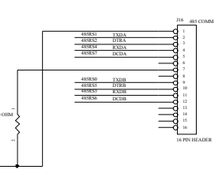

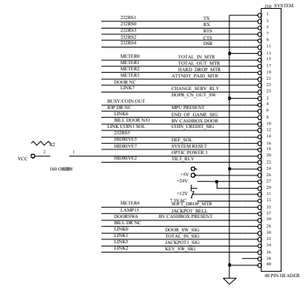

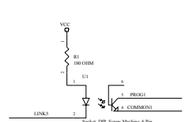

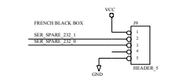

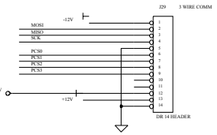

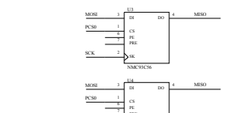

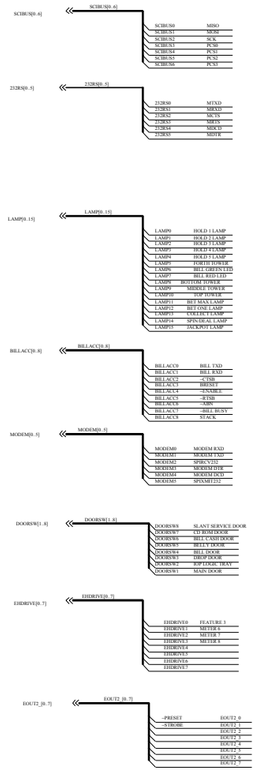

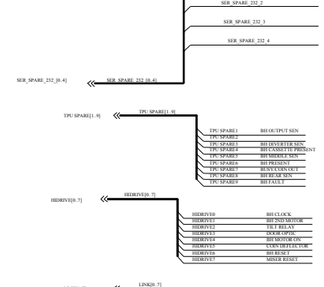

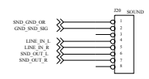

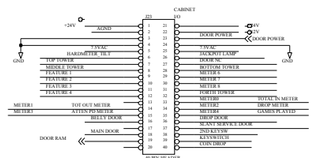

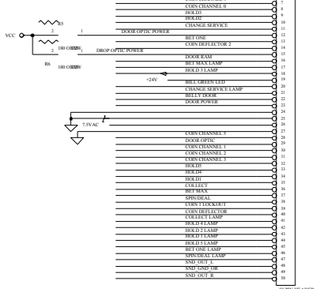

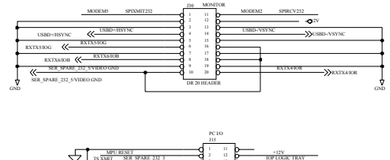

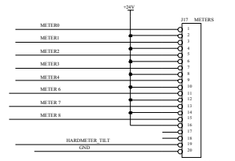

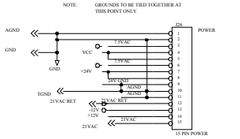

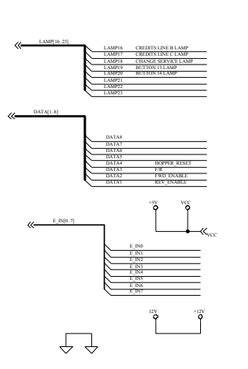

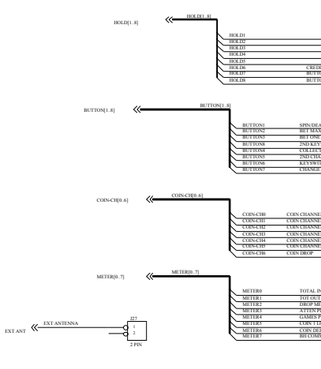

SCHEMATIC, V6700 BACKPLANE

Document Number
W-01299-0101.504

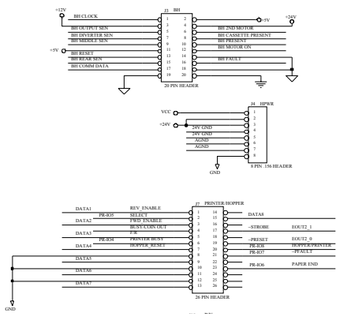

©2003 Bally Gaming and Systems

P2

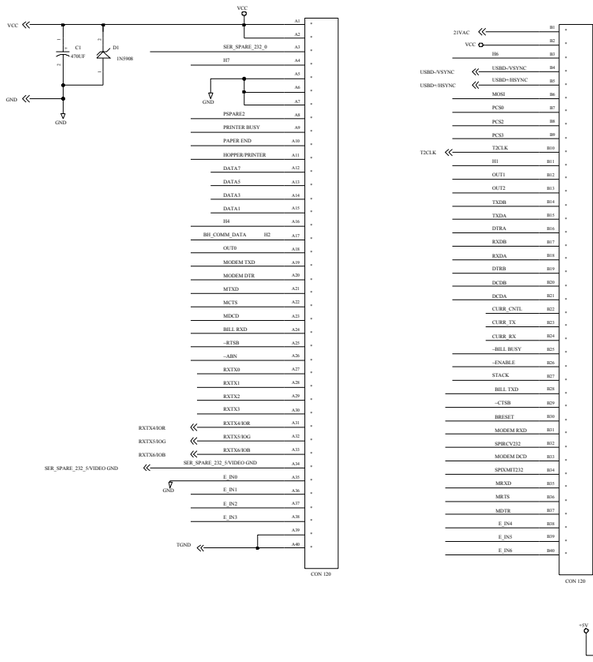

P1B

P1C

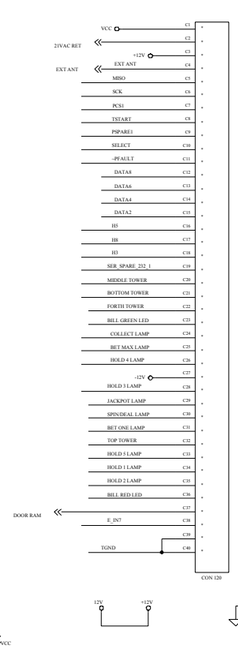

P2A

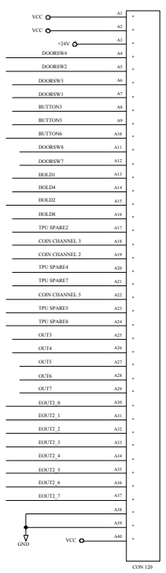

P2B

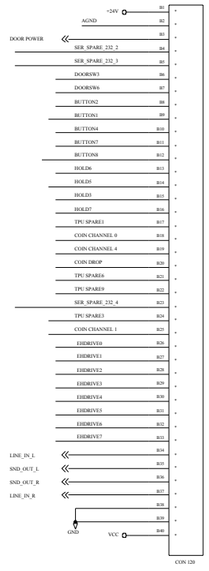

P2C

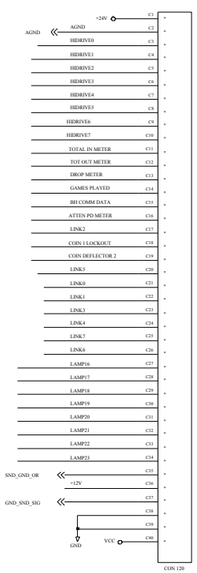

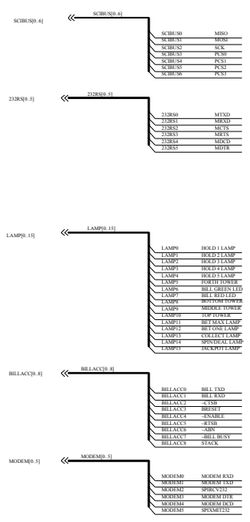

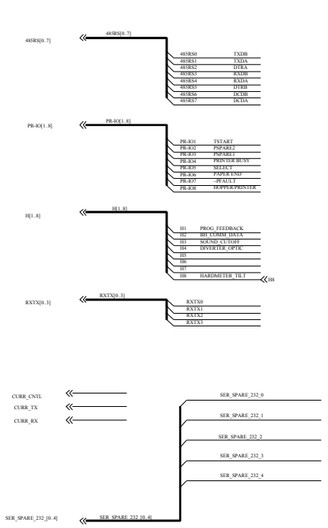

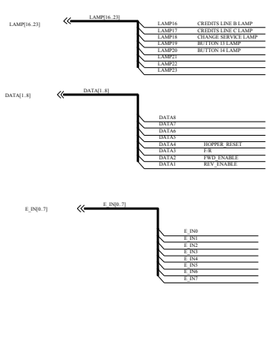

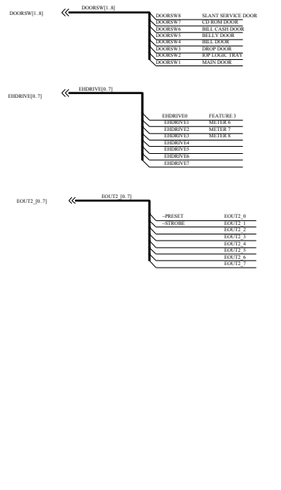

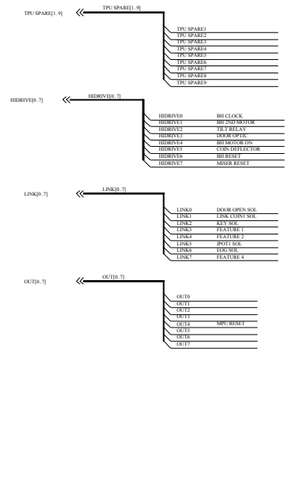

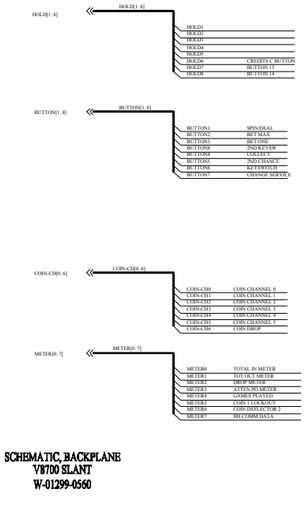

SCHEMATIC, BACKPLANE
V8700 SLANT
W-01299-0560

©2003 Bally Gaming and Systems

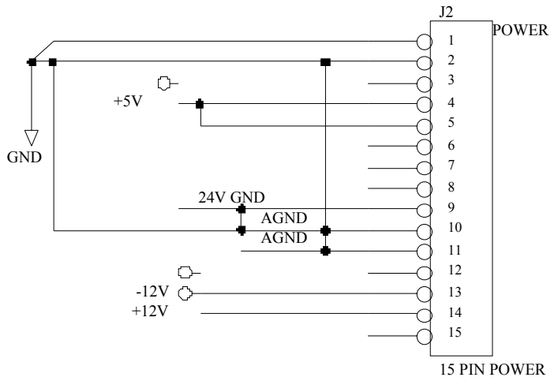

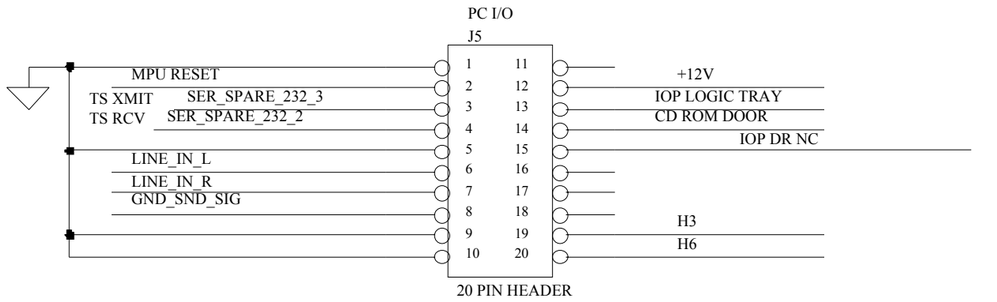

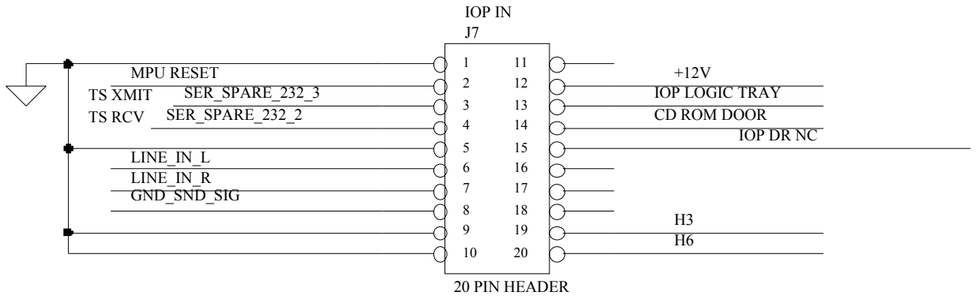

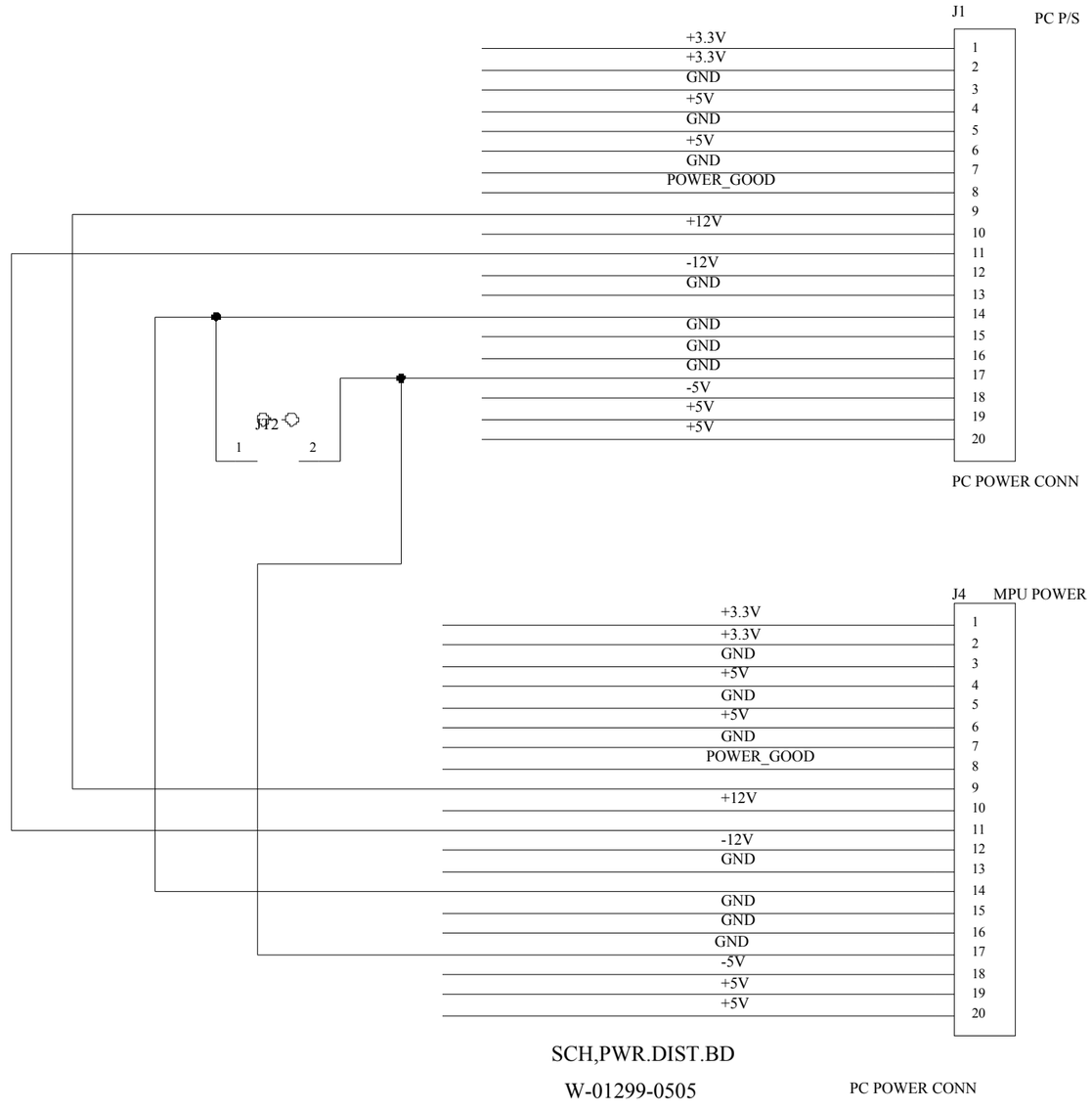

SCH,PWR.DIST.BD

W-01299-0505

©2003 Bally Gaming and Systems

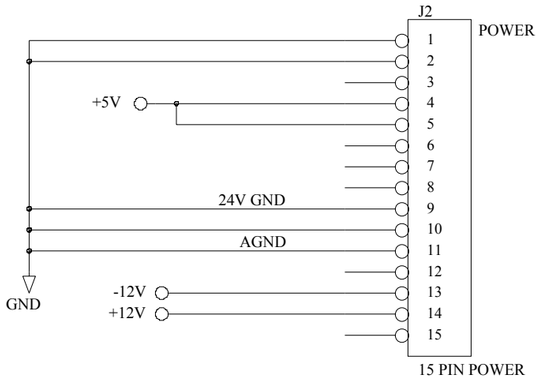

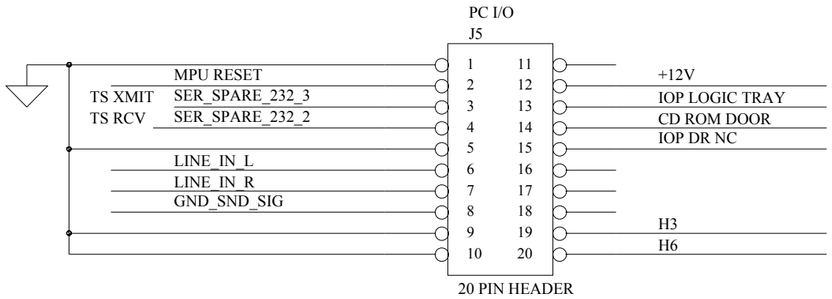

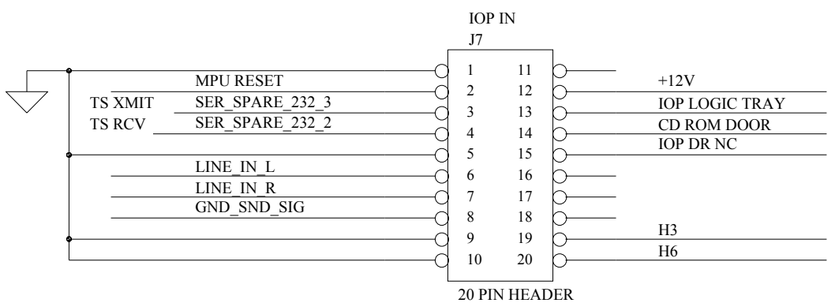

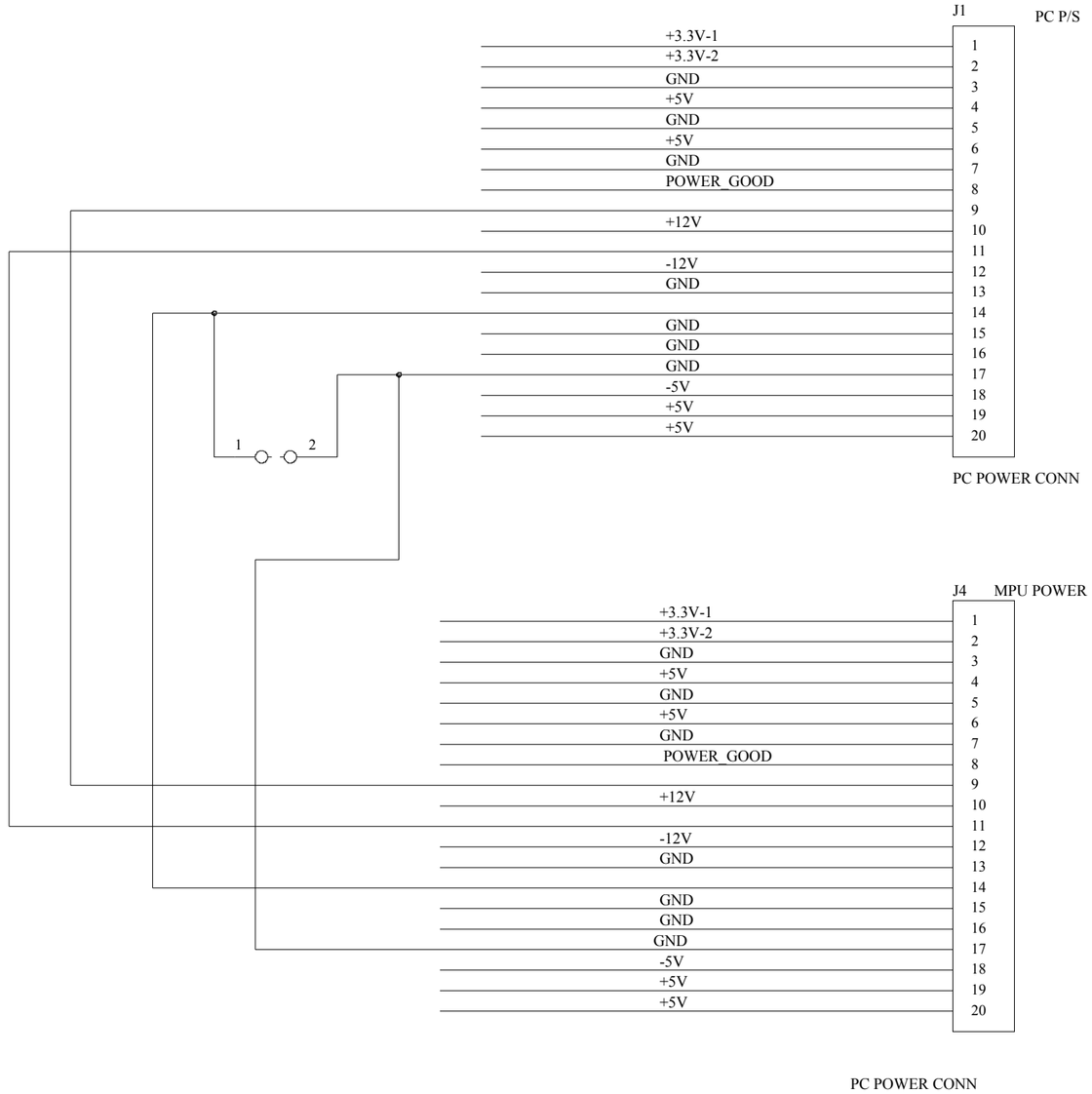

©2003 Bally Gaming and Systems

Door Optic Emitter and Detector Board
AS-03356-0427 and AS-03356-0428
☑V8717 ☑V8719 ☑Slant

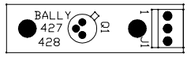

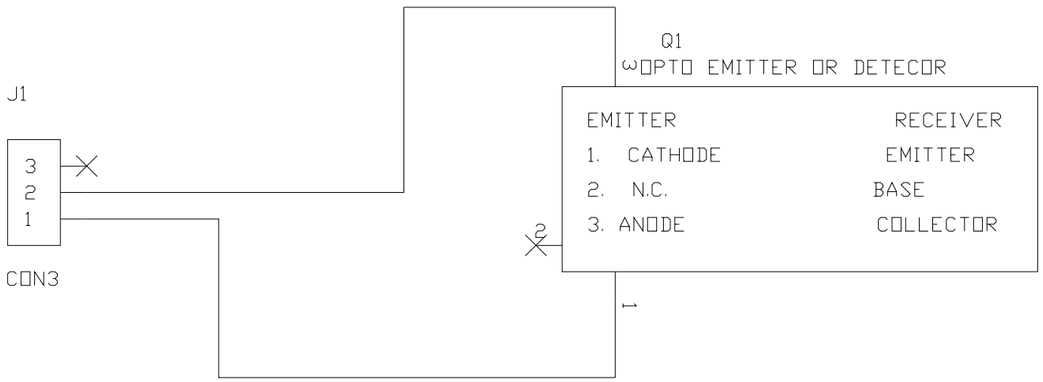

AS-3356-427 PARTS LIST

PART NUMBER	QUANTITY	REFERENCE	DESCRIPTION
E-00679-0036	1	Q1	HONEYWELL SE5455-004 I.R. EMITTER
E-00906-0002	1	J1	2 PIN HEADER MOLEX, RT ANGLE, FRT. LK 7395 SERIES
P-09018-0427	1		PCB, DOOR OPTIC

AS-3356-428 PARTS LIST

PART NUMBER	QUANTITY	REFERENCE	DESCRIPTION
E-00585-0119	1	Q1	HONEYWELL, SD 5443-0002 I.R. RECEIVER
E-00906-0003	1	J1	3 PIN HEADER MOLEX, RT ANGLE, FRT. LK 7395 SERIES
P-09018-0427	1		PCB, DOOR OPTIC

©2003 Bally Gaming and Systems

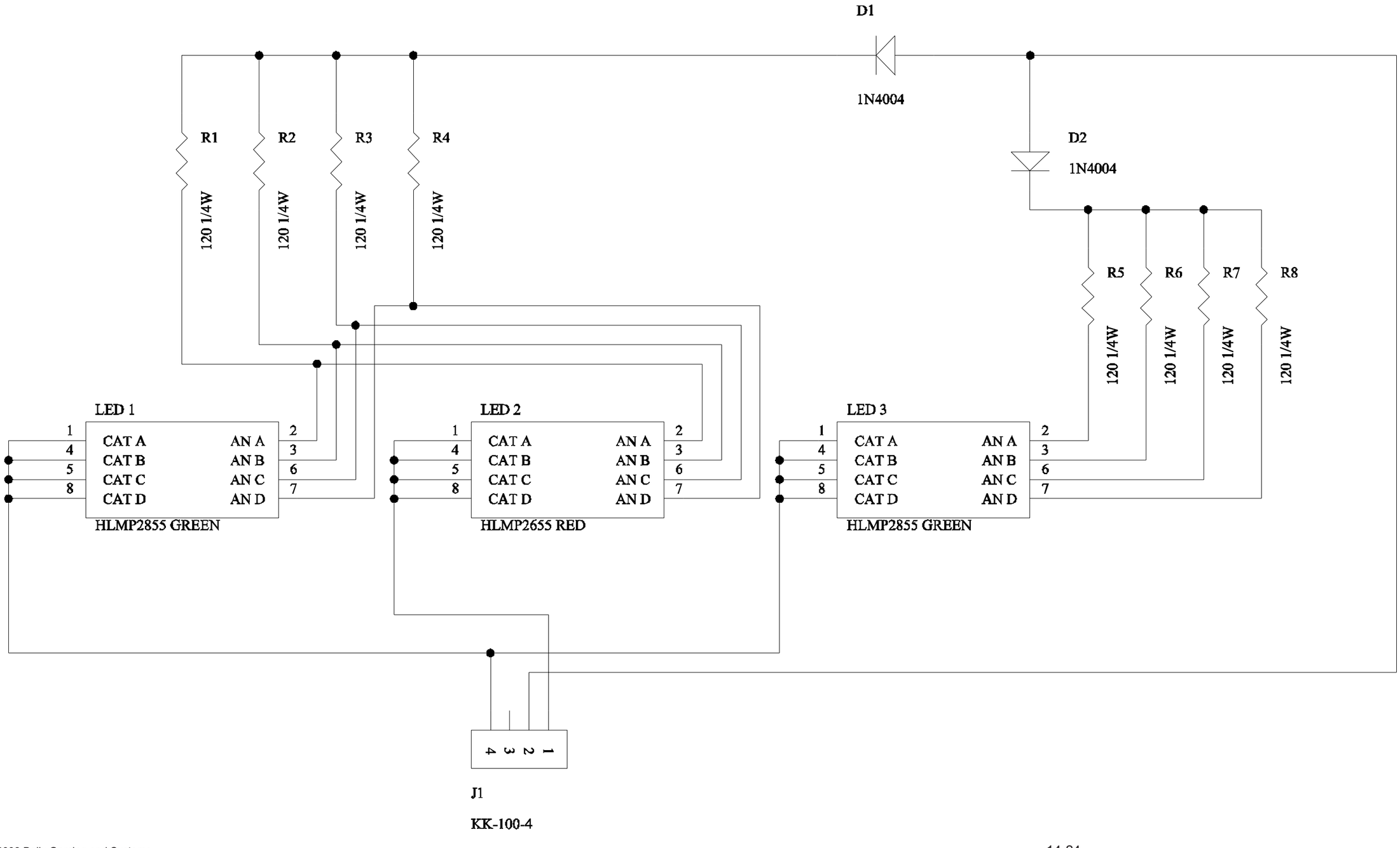

©2003 Bally Gaming and Systems

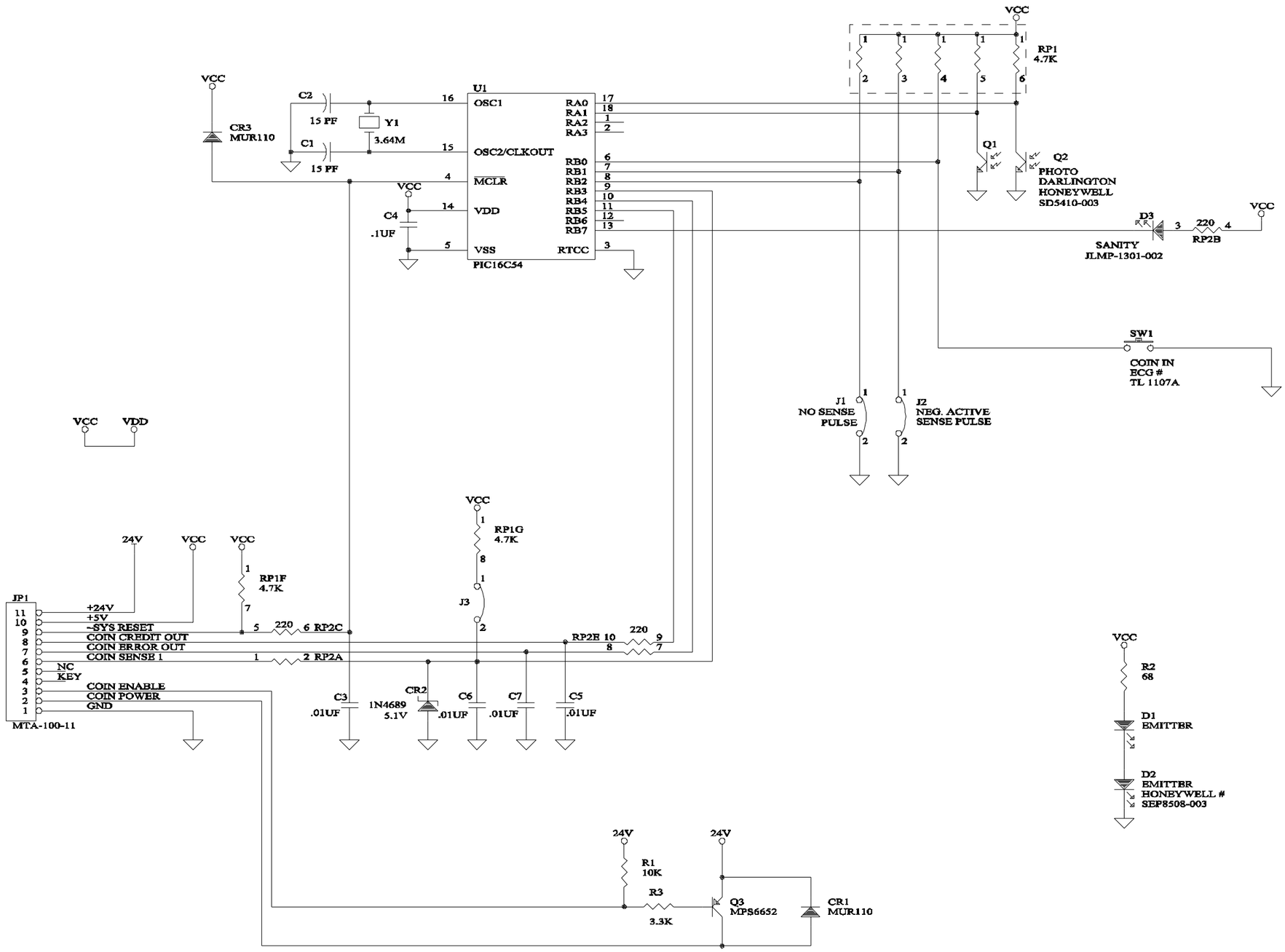

©2003 Bally Gaming and Systems

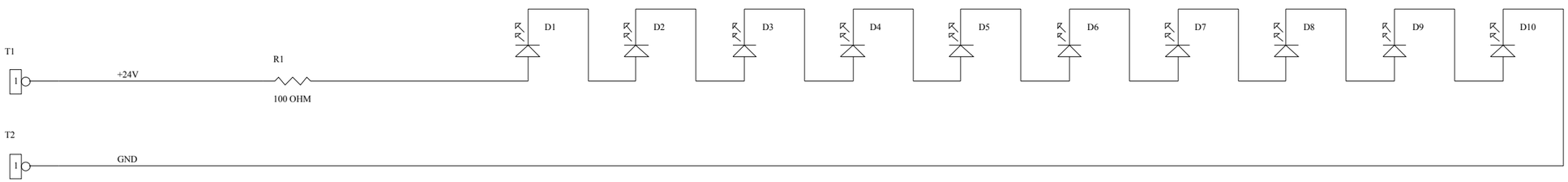

©2003 Bally Gaming and Systems

Serial Printer Interface Board AS-03356-0500
☑V8717 ☑V8719 ☑Slant

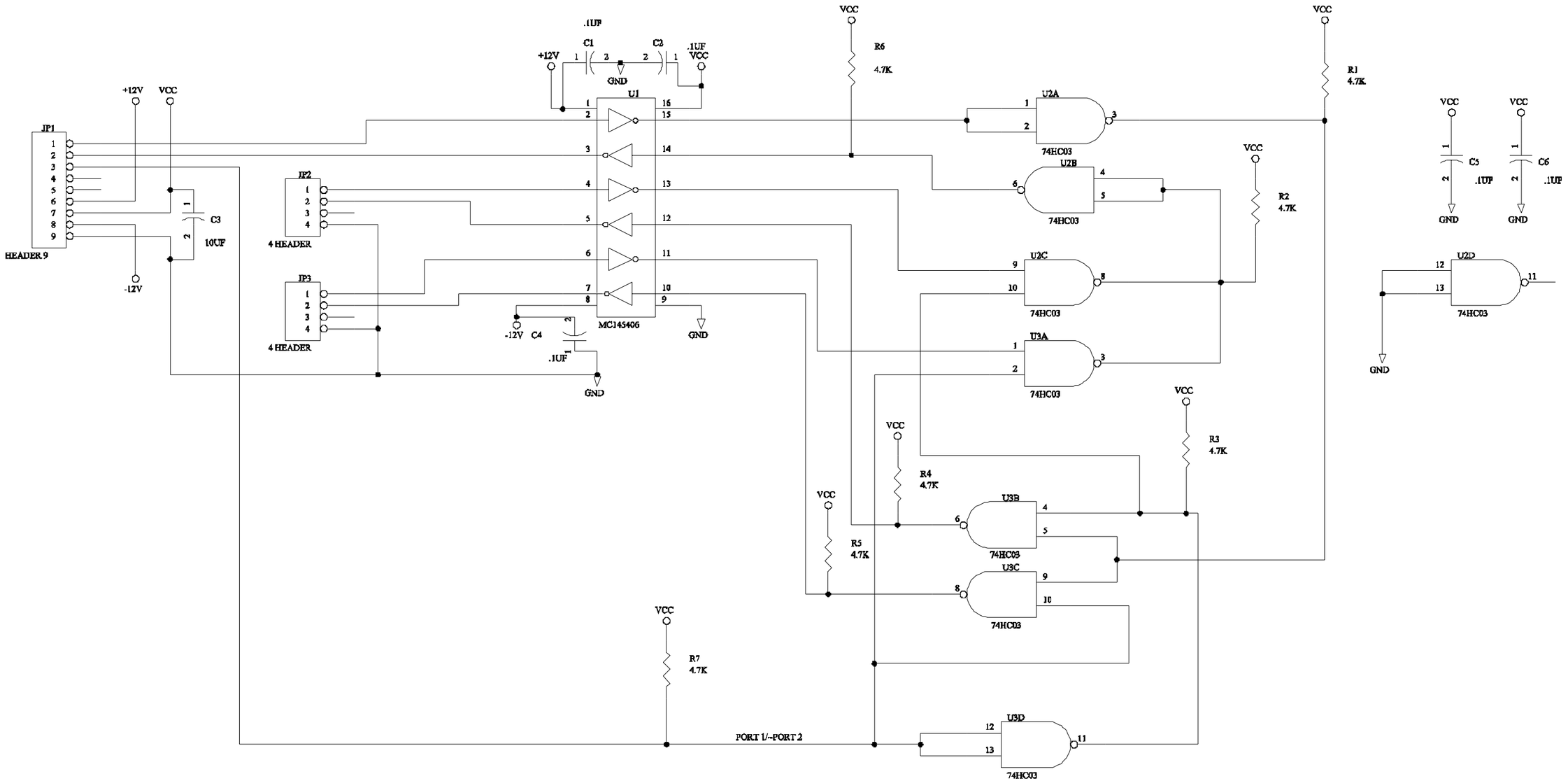

©2003 Bally Gaming and Systems

Hopper

Hopper Controller Board, FET, Dual Optic
AS-03356-0368
☑V8717 ☑V8719 ☑Slant

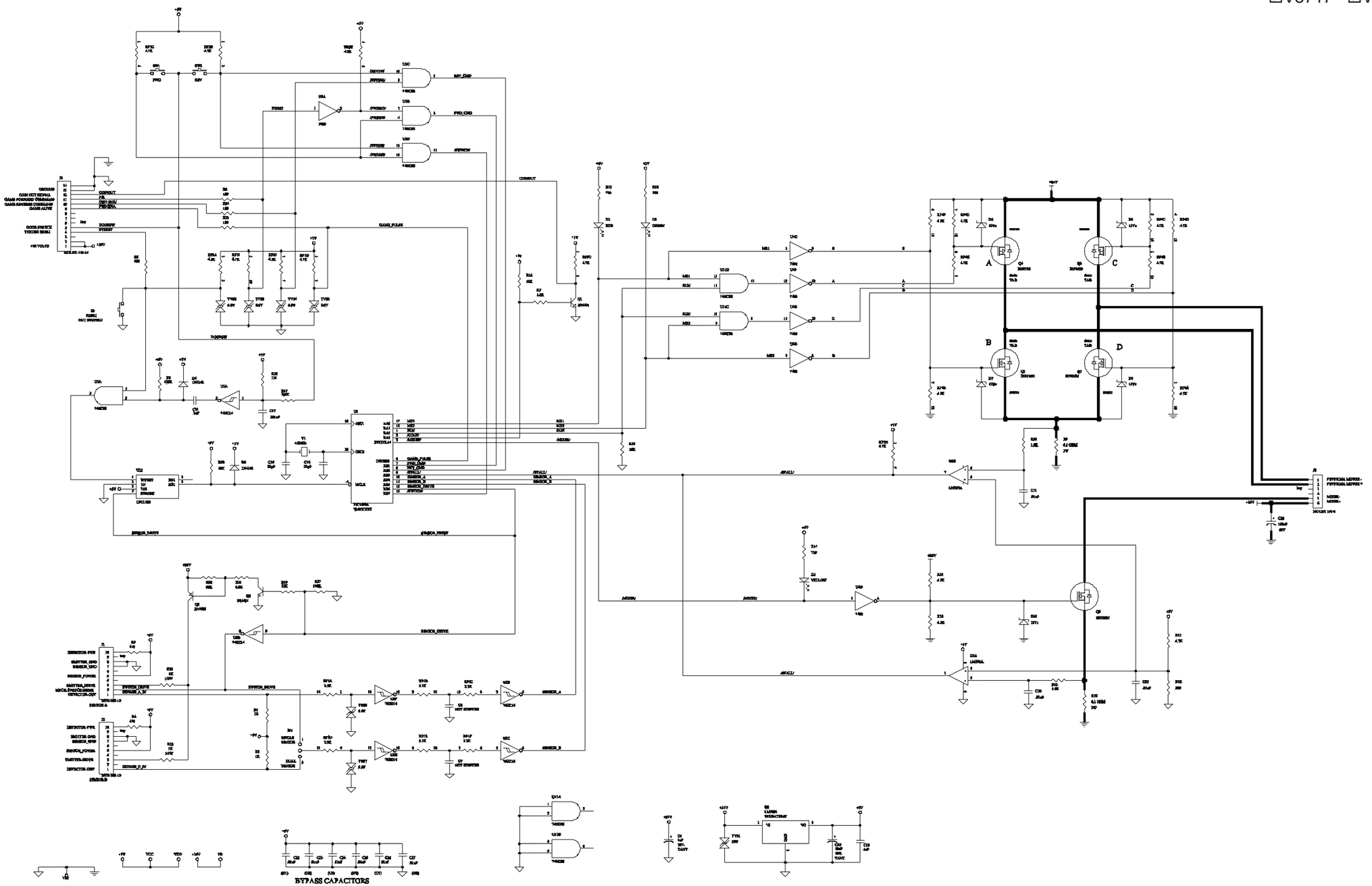

©2003 Bally Gaming and Systems