REVISIONS			
LTR	DESCRIPTION	ECO	DATE

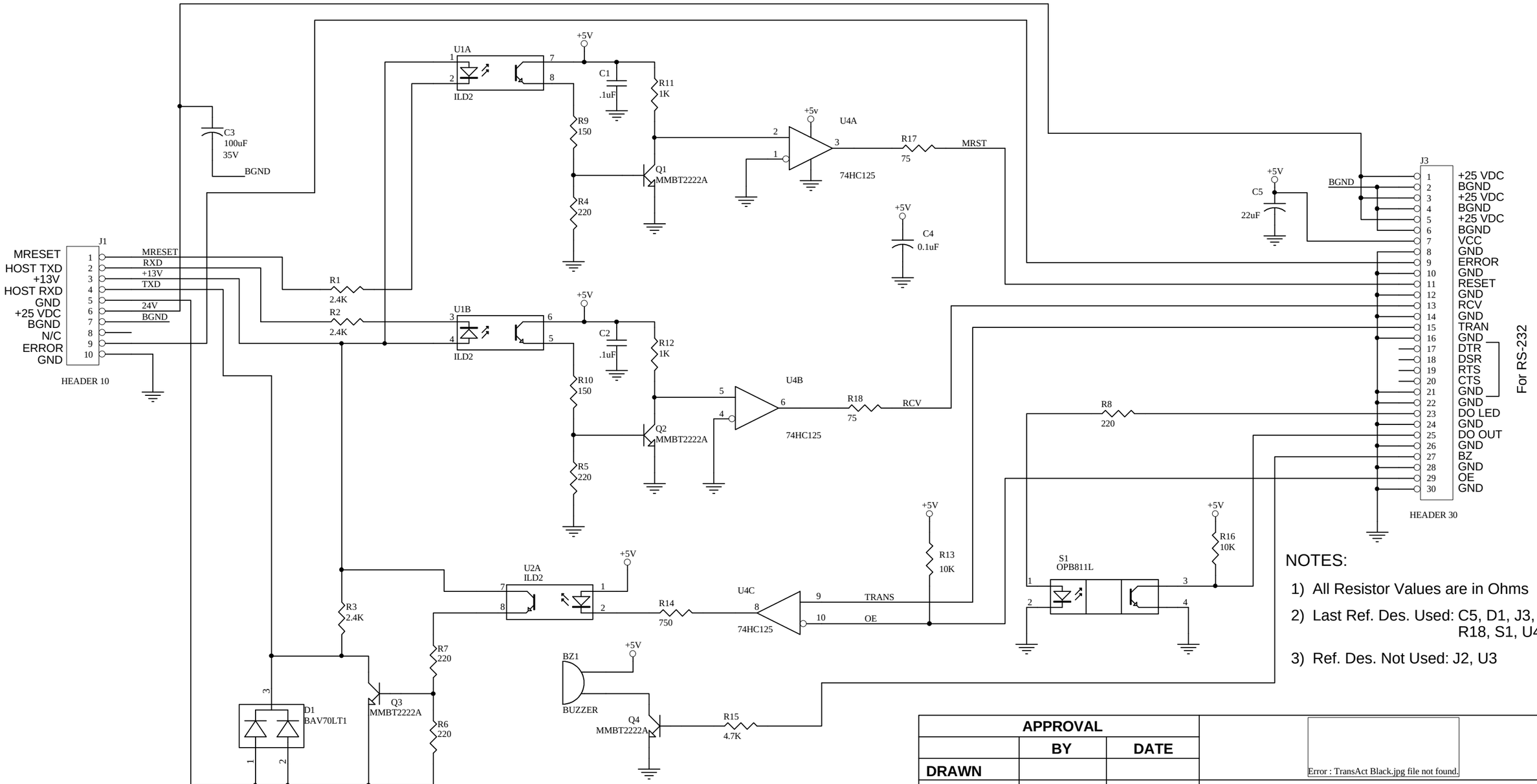

NOTES:

1) All Resistor Values are in Ohms
2) Last Ref. Des. Used: C5, D1, J3, Q4, R18, S1, U4
3) Ref. Des. Not Used: J2, U3

APPROVAL	BY	DATE
DRAWN		
CHECKED		
ENG.		

THE CONTENT OF THIS DOCUMENT IS PROPRIETARY. IT MAY NOT BE DIVULGED IN WHOLE OR IN PART WITHOUT PERMISSION FROM TRANSACT TECHNOLOGIES INC.

Error : TransAct Black.jpg file not found.

NETPLEX INTERFACE BOARD

B

N:\BROOKSD\M800\60062-01\10062-01.DDB - Documents\10062-01.sch

Date: 3-01

Sheet 1 **of** 1