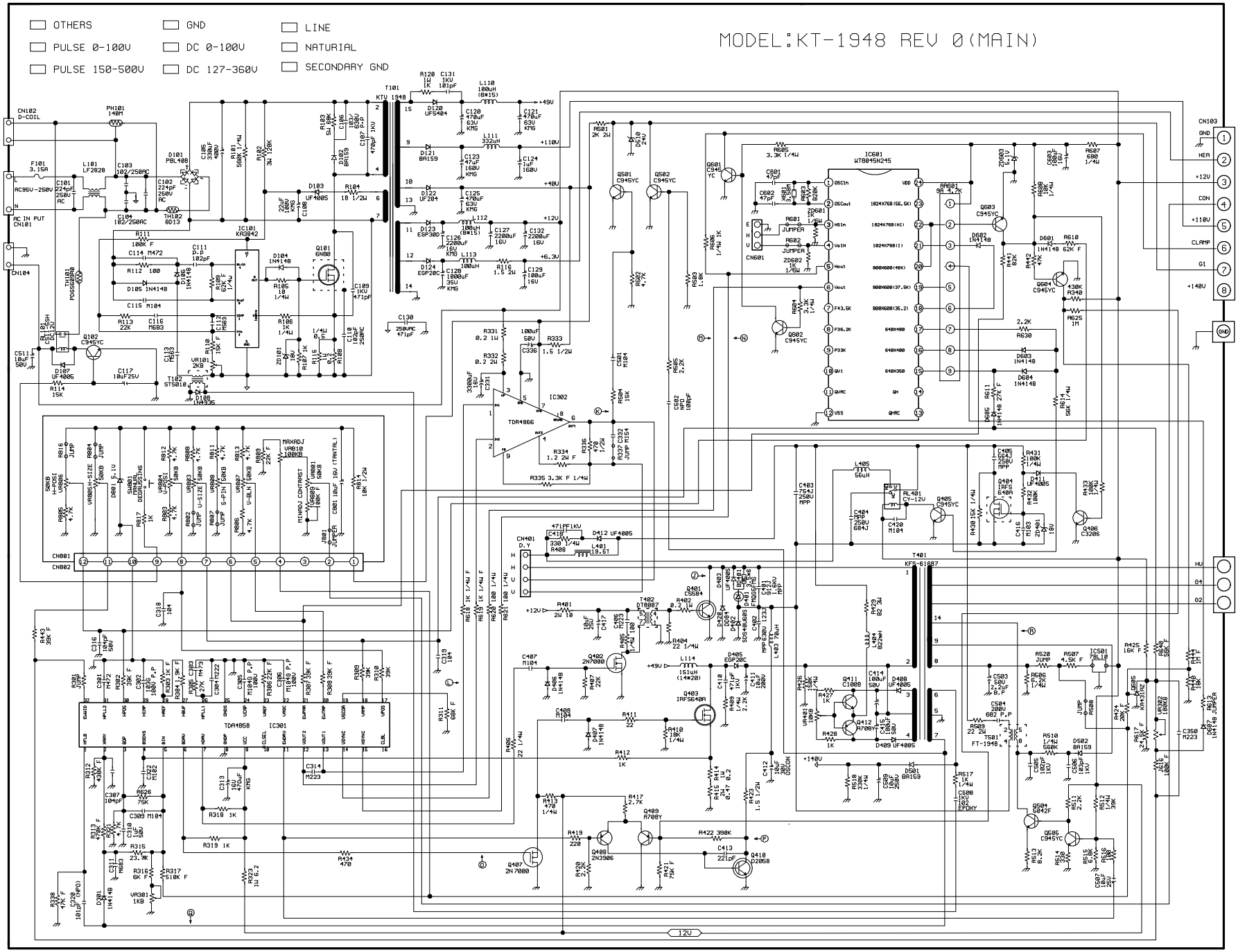
OTHERS
GND
LINE
PULSE 0-100V
DC 0-100V
NATURIAL
PULSE 150-500V
DC 127-360V
SECONDARY GND
MODEL:KT-1948 REV 0(MAIN)
CN102 D-COIL
PH101 140M
F101 3.15A
L101 LF2820
C103 102/250AC
C104 102/250AC
C101 224pF 250V AC
C102 224pF 250V AC
D101 PBL408
TH102 8D13
AC IN PUT CN101
CN104
TH101 PDS680R6
RB101 DB2L20
C511 10uF 50V
D107 UF4005
R114 15K
Q102 C945YC
C117 10uF25V
T102 ST5010
D108 1N4935
C105 330uF 400V
R101 560K 1/4W
R102 3M 120K
R103 5M 1/4W
C106 1500V 102
D103 BR133
C107 P.P 470pF 1KU
T101 KTU 1948
R120 1M 1K
C131 1KU 101pF
D120 UF5404
L110 100uH (BK15)
C120 470uF 63V KMG
C121 470uF 63V KMG
L111 332uH
D121 BR159
C123 470uF 160V KMG
C124 1uF 160V
D122 UF204
C125 470uF 63V KMG
D123 EGP30D
C126 2200uF 16V KMG
L112 100uH (BK15)
C127 2200uF 16V
C132 2200uF 16V
D124 EGP20C
C128 1000uF 35V KMG
L113 100uH
R115 1.5 2W
C129 100uF 16V
+49V
+110V
+40V
+12V
+6.3V
D103 UF4005
R104 18 1/2W
22uF 160V KMG
C108
IC101 KA3842
R111 100K F
C114 M472
R112 100
D105 1N4148
C115 M104
C111 P.P 102pF
D104 1N4148
R105 18 1/4W
Q101 6N80
C109 1KU 471pF
R113 22K
C116 M683
R108 62K F
R109 62K F
C112 M683
R106 1K 1/4W
C113 M683
R110 15K F
VR101 2KB
Z101 18V
R107 1K
R115 1/4W 0.5
R116 1/4W 0.5
R108 102pF 250VAC
C118 102pF 250VAC
C130 250VAC 471pF
R501 2K 2W
D510 24V
Q501 C945YC
Q502 C945YC
R502 4.7K
R503 1.8K
R505 2.2K
R506 15K
C501 M104
C502 NPO 100pF
R331 0.2 1W
R332 0.2 1W
C331 3300uF 10V
C336 100uF 50V
R333 1.5 1/2W
IC302 TDA4866
R334 1.2 2W F
R335 3.3K F 1/4W
R336 470 1/2W
R337 2K
C332 JUMP M154
Q601 C945 YC
IC601 WT8045N245
C601 47pF
C602 47pF
R601 JUMPER
R602 JUMPER
R603 820K
ZD601 1K 1/8W
ZD602 1K 1/8W
CN601
R605 3.3K 1/4W
R606 1/4W 1K
R604 1K 1/4W
Q602 C945YC
RN601 9R 4.7K
ZD603 2.2V
C603 100uF 16V
R607 680 1/4W
Q603 C945YC
R608 1/4W
D601 1N4148
R610 62K F
D602 1N4148
R609 82K
R612 4.7K
Q604 C945YC
R438K R340
R625 1M
R630 2.2K
D603 1N4148
D604 1N4148
R611 27K F
D605 1N4148
R614 56K 1/4W
CN103
GND
HER
+12V
CON
+110V
CLAMP
G1
+140V
GND
CN801
CN802
SKNB H-POS1 VR806
R816 JUMP
R804 JUMP
VR805 H-SIZE 50KB
D801 5.1V
SW801 DYNAMIC DGDRUSSING
VR804 V-SIZ 50KB
R812 4.7K
R808 4.7K
VR803 U-SIZE 50KB
R811 4.7K
VR808 S-PIN 50KB
R813 4.7K
VR807 U-BLN 50KB
R809 22K F
MAXADJ VR810 100KB
MINADJ CONTRAST VR809 100KB
VR801 50KB
C801 10uF 16V (TANTAL)
R801 10K 1/2W
R805 4.7K
R817 1K
R802 4.7K
R802 JUMP
R807 JUMP
R806 4.7K
J801 JUMPER
CN401 D.Y
C419 471PF1KU
R408 330 1/4W
D412 UF4005
L401 19.5T
R401 2W 10
C417 10uF
C406 1KU
Q402 D18002
R402 0.2 1W
Q401 C5884
R403 1K
D403 UF4005
D402 SDS40U6B3
D401 FMG6F15
C402 MPE301 1233
C401 5150V 1KU MPP
L403 78uH
R404 22 1/4W
R405 82 3W
L114 151uH (14*20)
Q403 IRFS640A
D405 EGP20C
R409 47uF 1/4W
C410 47uF 1/4W
C411 100uF 200V
D408 UF4005
C414 100uF 50V
R426 150K 1/4W
R427 1K
Q411 C1008
Q412 A708Y
R428 1K
D409 UF4005
R441 10KB
R406 22 1/4W
C407 M104
R407 2N7000
R408 22K
D407 1N4148
C408 M104
R411 22
R410 10K 1/4W
R412 1K
R413 470 1/4W
R417 2.7K
Q409 A708Y
R419 220
Q408 2N3906
R420 2K
R421 75K F
R422 390K
C413 221pF
Q410 D2058
Q407 2N7000
R414 470
R423 1.5 1/2W
R415 1W 24
R416 1W 24
C412 100uF 200V OSCON
+140V
R509 330K 1/4W
C509 102pF 250V
D501 BR159
R517 1K 1/4W
C508 102 EPOXY
L405 56uH
RL401 CY-12V
Q405 C945YC
C420 M104
C404 MPP 250V 684J
R430 15K 1/4W
Q404 IRF9640
R432 100K
D411 UF4005
C416 102
ZD401 18V
R433 100K 1/4W
Q406 C3206
C405 564J 250V MPP
R431 100K 1/4W
T401 KFS-81687
HU
G4
G2
C503 50V 2.2uF 6.F
C504 200V 682 P.P
R509 22 2W
TS01 FT-1948
R520 JUMP
R507 4.5K F
IC501 78L10
R506 1/4W
R510 1/4W 560K
D502 BR159
C505 102pF 1KU
C506 102pF 1KU
Q504 C842F
R511 2.2K
R512 1/4W 10K
Q505 C945YC
R513 8.2K
R514 330
R515 6.8K
R516 8.2K
C507 1uF 25V
R425 16K F
R446 56K F
R447 1M F
R448 18K
R413 JUMPER
D487 1N4148
C350 M223
R474 20K
R417 2.7K F
R402 100KB
R416 100KB F
IC301 TDA1858
R443 39K F
C316 104pF 50V
R301 JUMP
C301 M472
R302 39K F
C302 1000uF P.P
R303 1K F
R304 1K F
R305 27K
C304 M222
C305 M104G P.P 100V
C306 M104G P.P 100V
R307 39K F
R308 39K F
R309 39K
R310 39K
R311 68K F
C318 104
C319 104
R312 430K
C307 104pF
R626 75K
C309 M104
C322 M102
C313 470uF KMG
R319 1K
R313 470K F
R314 470K F
C310 4.7K 50V
R315 23.7K
R316 9K F
R317 510K F
VR301 1KB
R318 470
R321 1W 6.2
R338 47K F
C320 101uF (NPO)
D301 1N4148
12V