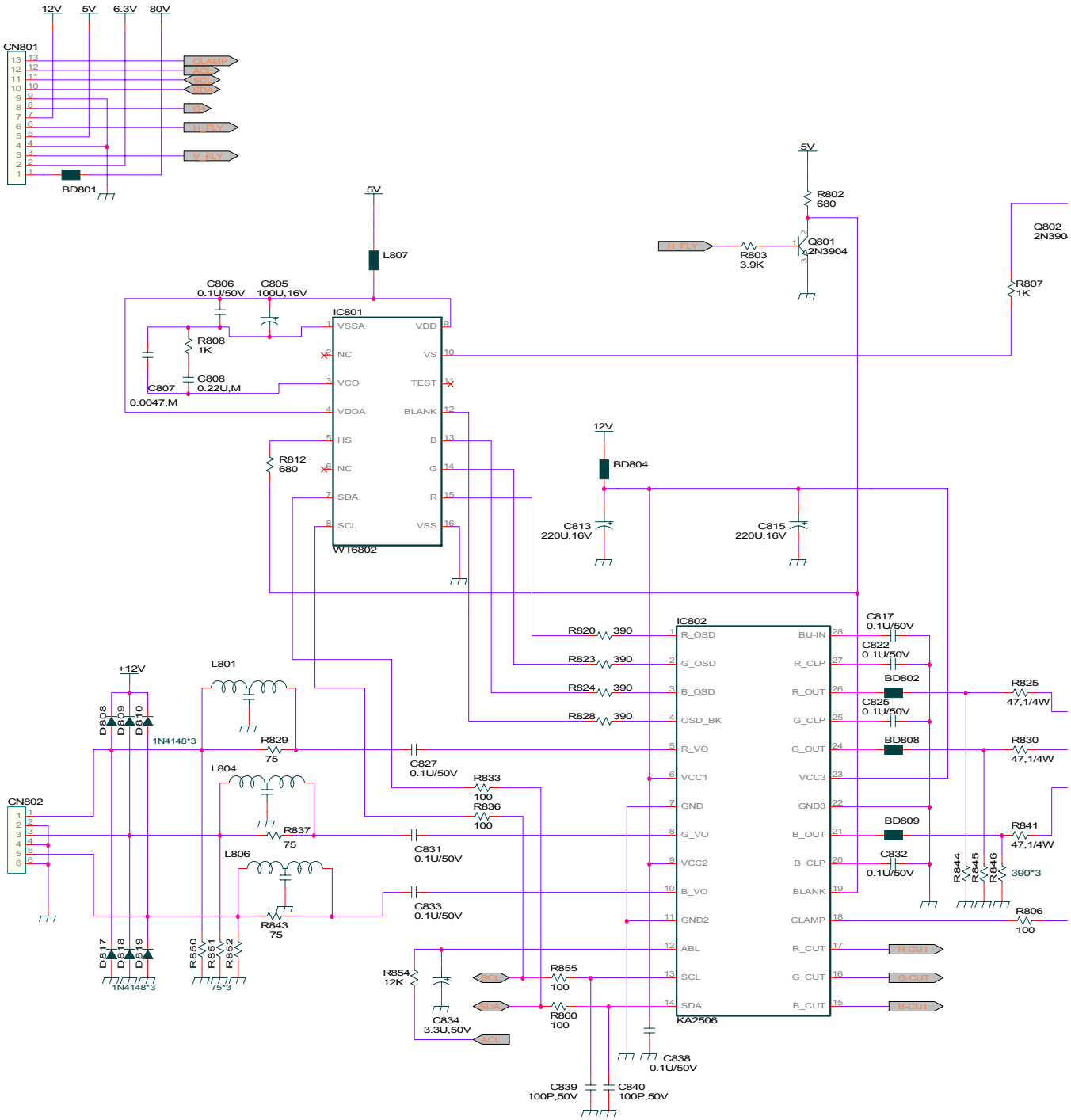
12V
5V
6.3V
80V
CN801
CLAMP
ACL
SCL
SDA
CI
H_FLY
V_FLY
BD801
5V
L807
C806
0.1U/50V
C805
100U,16V
IC801
VSSA
NC
VCO
VDDA
HS
NC
SDA
SCL
VDD
VS
TEST
BLANK
B
G
R
VSS
WT6802
R808
1K
C808
0.22U,M
C807
0.0047,M
R812
680
5V
R802
680
H_FLY
R803
3.9K
Q801
2N3904
Q802
2N390
R807
1K
12V
BD804
C813
220U,16V
C815
220U,16V
IC802
R_OSD
G_OSD
B_OSD
OSD_BK
R_VO
VCC1
GND
G_VO
VCC2
B_VO
GND2
ABL
SCL
SDA
BU-IN
R_CLP
R_OUT
G_CLP
G_OUT
VCC3
GND3
B_OUT
B_CLP
BLANK
CLAMP
R_CUT
G_CUT
B_CUT
KA2506
R820
390
R823
390
R824
390
R828
390
C817
0.1U/50V
C822
0.1U/50V
BD802
C825
0.1U/50V
BD808
BD809
C832
0.1U/50V
R825
47,1/4W
R830
47,1/4W
R841
47,1/4W
R844
R845
R846
390*3
R806
100
R-CUT
G-CUT
B-CUT
+12V
L801
D808
D809
D810
1N4148*3
R829
75
C827
0.1U/50V
R833
100
R836
100
L804
CN802
R837
75
C831
0.1U/50V
L806
C833
0.1U/50V
R843
75
D817
D818
D819
1N4148*3
R850
R851
R852
75*3
R854
12K
C834
3.3U,50V
SCL
SDA
ACL
R855
100
R860
100
C838
0.1U/50V
C839
100P,50V
C840
100P,50V

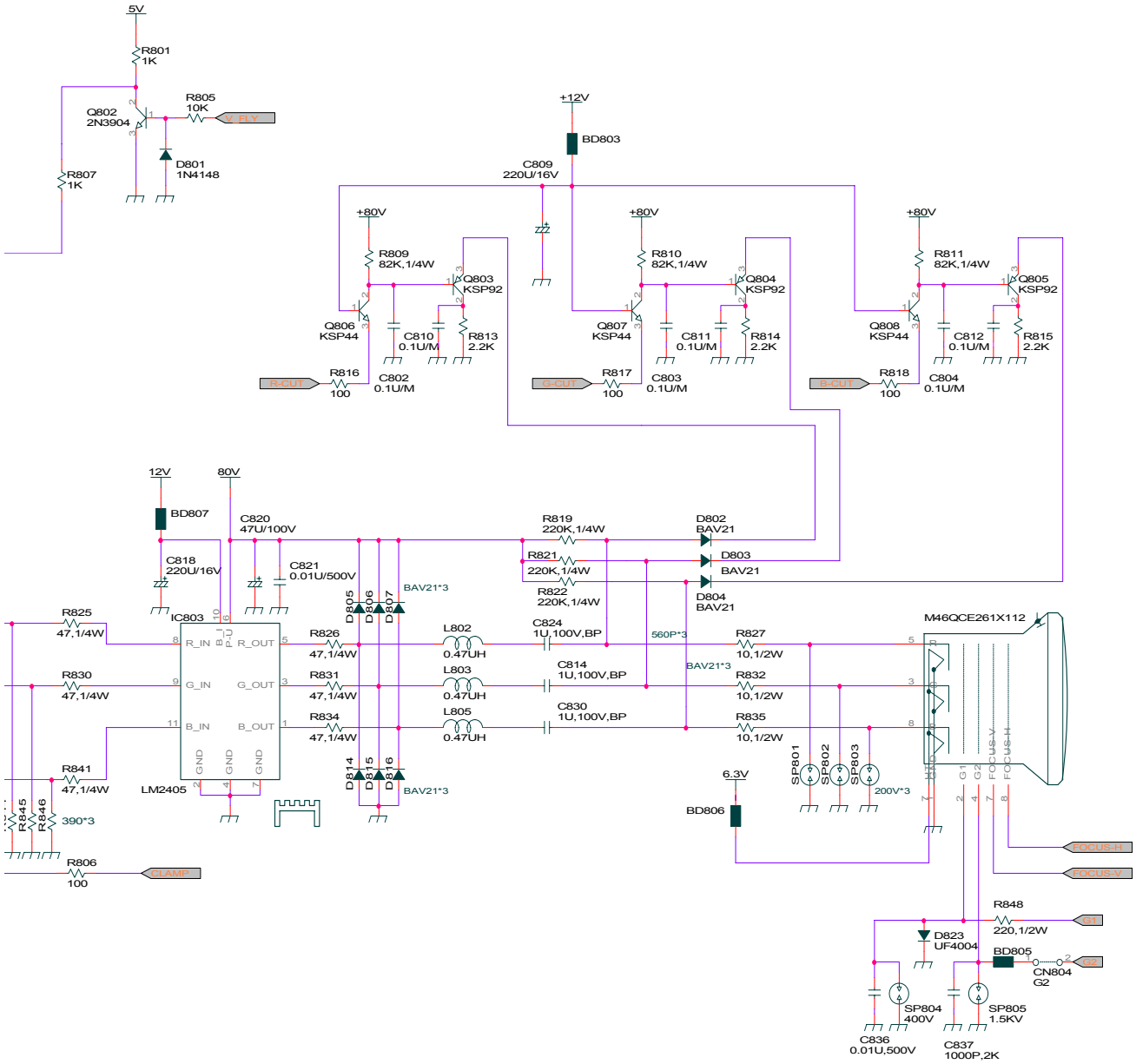
5V
R801
1K
R805
10K
Q802
2N3904
V_FLY
D801
1N4148
R807
1K
+12V
BD803
C809
220U/16V
+80V
R809
82K,1/4W
Q803
KSP92
Q806
KSP44
C810
0.1U/M
R813
2.2K
R816
100
C802
0.1U/M
R-OUT
R810
82K,1/4W
Q804
KSP92
Q807
KSP44
C811
0.1U/M
R814
2.2K
R817
100
C803
0.1U/M
G-OUT
R811
82K,1/4W
Q805
KSP92
Q808
KSP44
C812
0.1U/M
R815
2.2K
R818
100
C804
0.1U/M
B-OUT
12V
80V
BD807
C820
47U/100V
C818
220U/16V
C821
0.01U/500V
R819
220K,1/4W
R821
220K,1/4W
R822
220K,1/4W
D802
BAV21
D803
BAV21
D804
BAV21
D805
D806
D807
BAV21*3
IC803
R825
47,1/4W
R830
47,1/4W
R841
47,1/4W
R845
R846
390*3
R806
100
CLAMP
R_IN
G_IN
B_IN
R_OUT
G_OUT
B_OUT
GND
LM2405
R826
47,1/4W
R831
47,1/4W
R834
47,1/4W
L802
0.47UH
L803
0.47UH
L805
0.47UH
C824
1U,100V,BP
C814
1U,100V,BP
C830
1U,100V,BP
560P*3
BAV21*3
R827
10,1/2W
R832
10,1/2W
R835
10,1/2W
D814
D815
D816
BAV21*3
6.3V
BD806
SP801
SP802
SP803
200V*3
M46QCE261X112
FOCUS-H
FOCUS-V
R848
220,1/2W
G1
D823
UF4004
BD805
CN804
G2
SP804
400V
SP805
1.5KV
C836
0.01U,500V
C837
1000P,2K

FOCUS-H
FOCUS-V
B1
B2