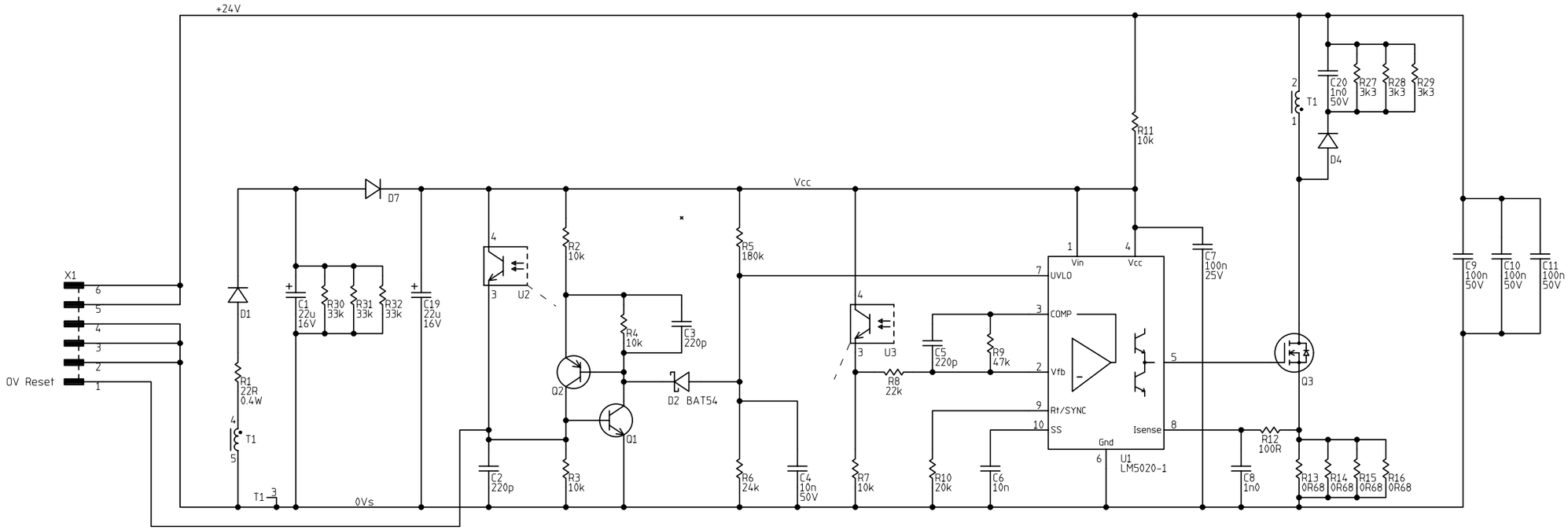

© SETEC PTY LTD 2007

SETEC PTY. LTD.				
TITLE: UNI-750-1 Schematic 5V-Aux -D				
DRAWN: LS	DATE: 20 JUL 2009	Document No: 017239	SHEET: 1 of 1	SIZE: A3